HURRICANE TEST LABORATORY, LLC

Testing & Evaluation Solutions

Coral Architectural Products

FL500 Window Wall System (Elevation E6)

March 12, 2007

J.D. Williams
Coral Architectural Products
3010 Rice Mine Road
Tuscaloosa, Alabama 35406

Re: FL500 Window Wall System (Specimen E6)

Dear Mr. Williams:

Enclosed you will find the test report package for the FL500 Window Wall System (Specimen E6) tests that were performed at Hurricane Test Laboratory, LLC (HTL).

This test report package includes the following items:

- Laboratory compliance letter
- HTL test report # 0402-105-06 (sheets 1 through 7)
- Coral Architectural Products drawing # FL500-01 (sheets 1 through 9)

If you have any questions, please contact our office.

Sincerely,

HURRICANE TEST LABORATORY, LLC

Vinu J. Abraham, P.E.
FL Reg. # 53820

HURRICANE TEST LABORATORY, LLC

FLORIDA OFFICE

6655 Garden Road

Riviera Beach, FL 33404

561.881.0020

Fax 561.881.0075

GEORGIA OFFICE

1701 Westfork Drive, Suite 106

Lithia Springs, GA 30122

770.941.6916

Fax 770.941.2930

www.htltest.com

LABORATORY COMPLIANCE

March 9, 2007

Jaime D. Gascon
Miami-Dade Building Code Compliance Office
Metro-Dade Flagler Building, Suite 1603
140 West Flagler Street
Miami, Florida 33130-1563

Re: Laboratory Compliance Letter (HTL06091)

Dear Mr. Gascon:

The tests described in the reports for the below jobs and specimen numbers have been performed in full accordance of the requirements of the Florida Building Code, with no deviations.

Job #	Specimen #	TAS 201	TAS 203	TAS 202			FORCED ENTRY
				AIR	WATER	STATIC	
0402-1105-06	E6	X	X			X	

If you have any questions, please contact our office.

Sincerely,

HURRICANE TEST LABORATORY, LLC

Vinu J. Abraham, P.E.
FL Reg. # 53820

HURRICANE TEST LABORATORY, LLC

FLORIDA OFFICE

6655 Garden Road

Riviera Beach, FL 33404

561.881.0020

Fax 561.881.0075

GEORGIA OFFICE

1701 Westfork Drive, Suite 106

Lithia Springs, GA 30122

770.941.6916

Fax 770.941.2930

www.htltest.com

TEST REPORT

HURRICANE TEST LABORATORY, LLC
TESTING AND EVALUATION SOLUTIONS
6655 GARDEN ROAD
RIVIERA BEACH, FLORIDA 33404
(561) 881-0030
FAX (561) 881-0075
www.htltest.com

MANUFACTURER'S IDENTIFICATION

1.0 NAME OF APPLICANT: CORAL ARCHITECTURAL PRODUCTS
3010 Rice Mine Road
Tuscaloosa, Alabama 35406
(800) 772-7737

2.0 CONTACT PERSON: J.D. Williams

3.0 HTL TEST NOTIFICATION #: HTL06091

4.0 HTL LAB CERTIFICATION: Miami-Dade County (03-0813.01), Florida Building Code, WDMA, Texas Department of Insurance (TDI), AAMA, and IAS-ES

PRODUCT IDENTIFICATION

5.0 Product Type: Aluminum Window Wall System

6.0 Model Number: FL-500 WINDOW WALL SYSTEM

7.0 Performance Class: +/- 60 psf

8.0 Overall Sample Size: 146-1/2" (w) x 120" (h)

9.0 Configuration: The test unit consisted of three (3) bays, with each bay having two (2) lites of glass. See Coral drawings "FL500-01", sheets 6 of 9 for an elevation of this test unit.

10.0 Drawing: This report is incomplete if not accompanied by Coral Architectural Products Drawing "FL500-01" and accompanying sheets bearing the raised seal of Hurricane Test Laboratory, LLC.

11.0 Sample Source: Samples provided by Coral Architectural Products.

PRODUCT DESCRIPTION

12.0 Frame Assembly: The frame used in this sample was fabricated using some or all of the following aluminum extrusions:

Description	Part #	Dimensions	Material
Sill Flashing End Dam	ED519-1	2.500" x 1.000" x 0.062"	6063-T6
Head or Wall Jamb	FL501	2.500" x 1.000" x 0.094"	6063-T6
Sill or Head	FL502	2.500" x 4.980" x 0.080"	6063-T6
Glass Stop	FL503	1.250" x 2.021" x 0.078"	6063-T6
Heavy Vertical Mullion	FL516	2.500" x 5.000" x 0.213"	6063-T6
Open Back Mullion Filler	FL505	0.681" x 4.670" x 0.080"	6063-T6
Intermediate Horizontal	FL506	2.500" x 4.980" x 0.080"	6063-T6
Subsill Flashing	FL519	2.620" x 5.402" x 0.084"	6063-T6

The following procedures (typical) were utilized when assembling this individual frame:

Frame Corner Construction: At each frame corner, the vertical frame members ran through while the horizontal frame members were square cut, butted and mechanically fastened to the vertical frame member using #14 x 1" HHSTC fasteners that passed through the vertical and threaded into the horizontal members screw splines.

Frame Joint Sealant: Each frame joint was sealed using strips of Schnee-Morehead SM5601TackyTape® Industrial Sealant Tape (Interior side of each frame joint only.)

ENGINEER OF RECORD

3/9/2007
Vinu J. Abraham, P.E.
FL Reg. #53280

13.0 Glazing:

13.1 Glazing Material: These test units used three different glass types:

Glass Type "U": 5/8" laminated glass with the following components:
- ¼" heat strengthened glass
- 0.120 Uvekol "S" Interlayer (Miami-Dade # 03-1117.05)
- ¼" heat strengthened glass

Glass Type "A": 9/16" laminated glass with following components:
- ¼" heat strengthened glass
- 0.075" Solutia VSO2 Interlayer (Miami-Dade # 03-0514.15)
- ¼" heat strengthened glass

Glass Type "B": 9/16" laminated glass with following components:
- ¼" heat strengthened glass
- 0.090" Solutia PVB Interlayer (Miami-Dade # 03-0105.02)
- ¼" heat strengthened glass

13.2 Glazing Method: Each glass lite used in this sample was glazed using the following (typical) procedures:

Exterior Side: Using continuous strips of an extruded EPDM exterior glazing gasket (Part #NG1). Each corner of the gasket is sealed using a 2" long cap bead of Dow Corning 795 Structural Silicone Sealant in both directions of the gasket.

Interior/Exterior Side: Using continuous strips of an extruded EPDM interior spacer gasket (Part #NG14) and Dow Corning 995 structural silicone sealant.

13.3 Daylight Opening:

Qty.	Daylight Opening	Glass Bite	Glass Type	Location
3	57-1/2" (w) x 16-1/2" (h)	9/16"	U	Top Three Lites
1	57-1/2" (w) x 96" (h)		U	Lower Center Lite
1	57-1/2" (w) x 96" (h)		B	Lower Left Lite
1	57-1/2" (w) x 96" (h)		A	Lower Right Lite

14.0 Sealant's Used:

Location	Sealant
Perimeter Sealant	Dow Corning 795 Silicone Sealant
Frame Joint Sealant	Schnee-Morehead SM5601TackyTape® Industrial Sealant Tape (Interior side of each frame joint only.)
Glazing and Internal Sealant	Dow Corning 995 Structural Silicone Sealant

INSTALLATION

15.0 Following is a description of how this sample was installed in the test buck when viewed from the exterior side:

Location	Anchor Description & Schedule
Frame Head and Sill.	The frame head and sill are attached to the opening using two (2) per location, 3/8" x 1-1/2" HHW Tek Screws located 2" from edge of mullions.
Frame Jambs	The frame jamb was attached to the opening using two (2) per location, 3/8" x 2" HHW Tek Screws located above and below midpoint of jambs.

NOTE: There is a 1/4" shim space used around the entire perimeter of this test sample.

ENGINEER OF RECORD

3/9/2007

TEST RESULTS

16.0 SUMMARY OF RESULTS

Test Method	Test Conditions	Test Conclusion and Test Date
Uniform Static Load Test (ASTM E330 and TAS 202)	+/- 60 psf Design Pressure	PASS
Large Missile Impact Test (TAS 201 and ASTM E1886/E1996)	9-lb, 2 x 4 @ 50ft/sec	PASS
Cyclic Load Test (TAS 203 and ASTM E1996)	+/- 60 psf Design Pressure	PASS

17.0 UNIFORM STATIC LOAD TEST RESULTS:

17.1 LOCATION OF DEFLECTION MEASUREMENTS:

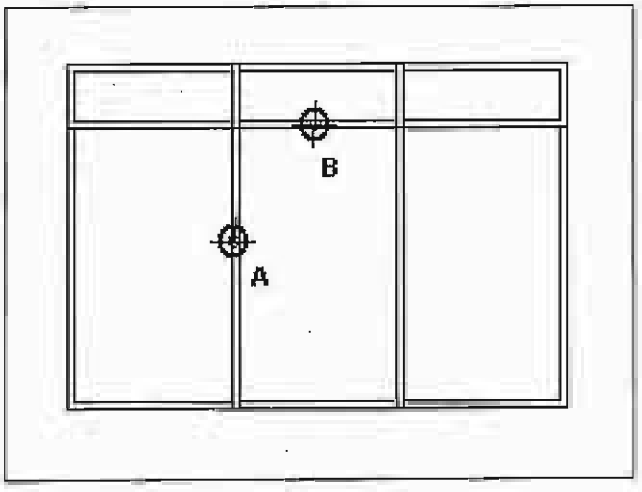

17.2 TEST DATA:

POSITIVE LOAD:

LOCATION A				
LOAD (psf)	Deflection (in.)		Permanent Set (in.)	
	Measured	Allowed	Measured	Allowed
+ 45	0.422	0.667	N/A	0.240
+ 60	0.612	0.667	N/A	0.240
+ 90	N/A	N/A	0.025	0.240

ENGINEER OF RECORD

3/9/2007

LOCATION B				
LOAD (psf)	Deflection (in.)		Permanent Set (in.)	
	Measured	Allowed	Measured	Allowed
+ 45	0.051	0.270	N/A	0.090
+ 60	0.042	0.270	N/A	0.090
+ 90	N/A	N/A	0.031	0.090

NEGATIVE LOAD:

LOCATION A				
LOAD (psf)	Deflection (in.)		Permanent Set (in.)	
	Measured	Allowed	Measured	Allowed
- 45	0.504	0.670	N/A	0.240
- 60	0.628	0.670	N/A	0.240
- 90	N/A	N/A	0.004	0.240

LOCATION B				
LOAD (psf)	Deflection (in.)		Permanent Set (in.)	
	Measured	Allowed	Measured	Allowed
- 45	0.008	0.270	N/A	0.090
- 60	0.008	0.270	N/A	0.090
- 90	N/A	N/A	0.510	0.090

17.2.1 REMARKS:

No signs of failure were observed in any area of this test specimen during the uniform static load test. As such, this specimen was found to satisfy the uniform static load test requirements of Florida Building Code TAS 202.

18.0 IMPACT TEST DATA:

18.1 LARGE MISSILE IMPACT TEST

Impact #	Velocity (ft/s)	Glass Temperature (°F)	X Coordinate (in.)	Y Coordinate (in.)
1	49.55	71	28.25	52.00
2	50.00	71	40.50	12.00
3	49.16	71	122.50	52.00
4	49.48	71	139.00	11.50
5	49.63	71	49.50	63.25

ENGINEER OF RECORD

3/9/2007

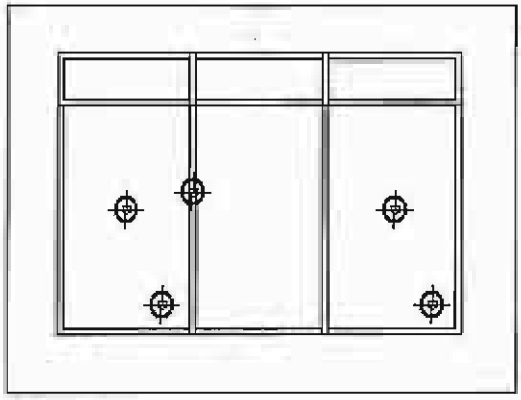

18.1.1 IMPACT REMARKS:

Impacts for this test hit the intended targets resulting in the recorded measurements. There were no signs of penetration, rupture, or opening after the large missile impact test. Upon completion of the large missile impact test, this sample subsequently underwent the cyclic load test as specified Florida Building Code TAS 201 and ASTM E1886/1996.

18.2 CYCLIC LOAD TEST

18.2.1 TEST PARAMETERS:

Positive Design Load	60 psf
Negative Design Load	60 psf

18.2.2 TEST SPECTRUM:

Positive Loads:

# OF INWARD ACTING CYCLES/STAGE			
12 – 30 (psf)	**0 – 36 (psf)**	**30 – 48 (psf)**	**18 – 60 (psf)**
3500	300	600	100

Negative Loads:

# OF OUTWARD ACTING CYCLES/STAGE			
18 – 60 (psf)	**30 – 48 (psf)**	**0 – 36 (psf)**	**12 – 30 (psf)**
50	1050	50	3350

ENGINEER OF RECORD

3/9/2007

18.2.3 DEFLECTION GAGE LOCATIONS:

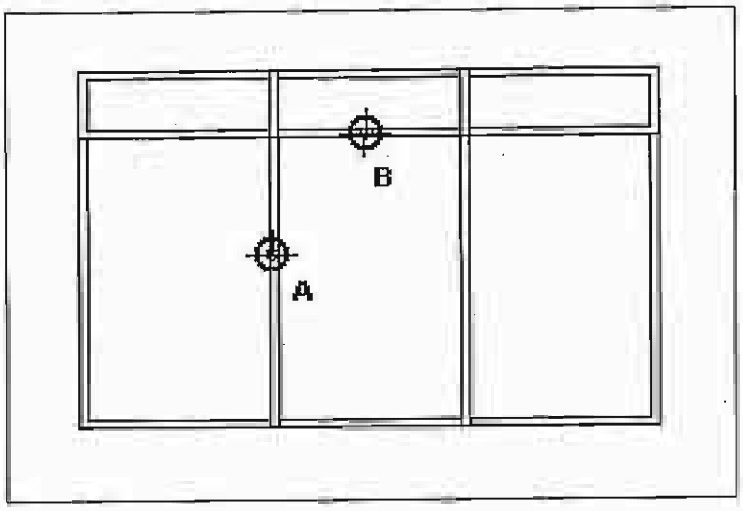

18.3 PERMANENT SET DATA:

	INWARD (POSITIVE) LOAD		OUTWARD (NEGATIVE) LOAD	
Location	**Measured Permanent Set (in.)**	**Allowable Permanent Set (in.)**	**Measured Permanent Set (in.)**	**Allowable Permanent Set (in.)**
A	0.000	0.240	0.038	0.240
B	0.000	0.090	0.180	0.090

18.4 REMARKS:
The test unit was inspected carefully upon completion of the cyclic test for failures. None were found. As such, this specimen was found to satisfy the cyclic test requirements of Florida Building Code TAS 203 and ASTM E1886/1996.

MISCELLANEOUS INFORMATION

19.0 CERTIFICATION & DISCLAIMER STATEMENT:
All tests performed on this test specimen were witnessed in accordance with the specifications of the applicable codes, standards & test methods listed below by the Hurricane Test Laboratory, LLC located at 6655 Garden Road, Riviera Beach, Florida. HTL does not have, nor does it intend to acquire or will it acquire, a financial interest in any company manufacturing or distributing products tested at HTL. HTL is not owned, operated or controlled by any company manufacturing or distributing products it tests. This report is only intended for the use of the entity named in section 1.0 of this report. Detailed assembly drawings showing wall thickness of all members, corner construction and hardware applications are on file and have been compared to the test specimen submitted. A copy of this test report along with representative sections of the test specimen will be retained at HTL for a period of four (4) years. All results obtained apply only to the specimen tested and they do indicate compliance with the performance requirements of the test methods and specifications listed in the following section.

20.0 APPLICABLE CODES, STANDARDS & TEST METHODS:
ASTM E330 - Standard Test Method for Structural Performance of Exterior Windows, Curtain Walls, and Doors by Uniform Static Air Pressure Difference.

ENGINEER OF RECORD

3/9/2007

ASTM E1886 – Standard Test Method for Performance of Exterior Windows, Curtain Walls, Doors and Storm Shutters Impacted by Missiles and Exposed to Cyclic Pressure Differentials.
ASTM E1996 – Standard Specification for Performance of Exterior Walls, Glazed Curtain Walls, Doors, and Storm Shutters Impacted by Windborne Debris in Hurricanes.
South Florida Building Code (SFBC) – Section 3603.2 (b) 5.
Florida Building Code TAS 201 – Impact Test Procedures.
Florida Building Code TAS 202 – Criteria For Testing Impact and Non-Impact Resistant Building Envelope Components Using Uniform Static Air Pressure.
Florida Building Code TAS 203 – Criteria For Testing Products Subject To Cyclic Wind Pressure Loading.

21.0 LIST OF OFFICIAL OBSERVERS:

Vinu J. Abraham, P.E. – HTL, Managing Partner
Urmilla Jokhu-Sowell – HTL, Assistant Operations Manager
John Spallina – HTL, Technician
Michelle Seybert – HTL, Technician
Veron Wickham – HTL, Technician
Freddie Henderson – HTL, Technician
J.D. Williams – Coral Architectural Products

ENGINEER OF RECORD

3/9/2007

DRAWINGS

HTL TEST REPORT DRAWINGS FOR FL500 WINDOW WALL SYSTEM PROTOCOLS: PA201/202/203

FOR USE IN HURRICANE ZONES REQUIRING LARGE MISSILE IMPACT PROTECTION

INDEX TO DRAWINGS

1 INDEX TO DRAWINGS AND NOTES
2 FRAMING ELEVATIONS– E1 LIGHT MULLION WITH STEEL–LONG SPAN–STEEL SUBSTRATE
3 FRAMING ELEVATIONS– E2 LIGHT MULLION WITH STEEL–LONG SPAN–CONCRETE SUBSTRATE
4 FRAMING ELEVATIONS– E3 LIGHT MULLION WITH STEEL–LONG SPAN–STEEL/WOOD SUBSTRATE
5 FRAMING ELEVATIONS– E4 LIGHT MULLION WITHOUT STEEL–SHORT SPAN–STEEL SUBSTRATE
6 FRAMING ELEVATIONS– E6 HEAVY MULLION WITHOUT STEEL–LONG SPAN–STEEL SUBSTRATE
7 FRAMING DETAILS
8 FRAMING DETAILS
9 BILL OF MATERIALS AND GLAZING SCHEDULE

ABBREVIATIONS:
D.L.O. = DAY LIGHT OPENING

Hurricane Test Laboratory, LLC

AS TESTED UNLESS OTHERWISE NOTED
Date 3-12-07
Job# 0402-1105-06

REV	BY	DATE	DESCRIPTION
—	—	—	—

Coral Architectural Products
3010 RICE MINE ROAD, TUSCALOOSA, AL 35405
PHONE: 800-772-7737 FAX: 800-255-7320

HTL TEST REPORT DRAWINGS FOR FL500 WINDOW WALL SYSTEM PROTOCOLS: PA201/202/203

INDEX TO DRAWINGS AND NOTES

DATE		
2/8/2007		
DRAWN PCH	CHECKED JDW	APPROVED JDW
PROJECT NO. HTL TEST		
DRAWING NO. FL500-01		
SHEET 1 OF 9		

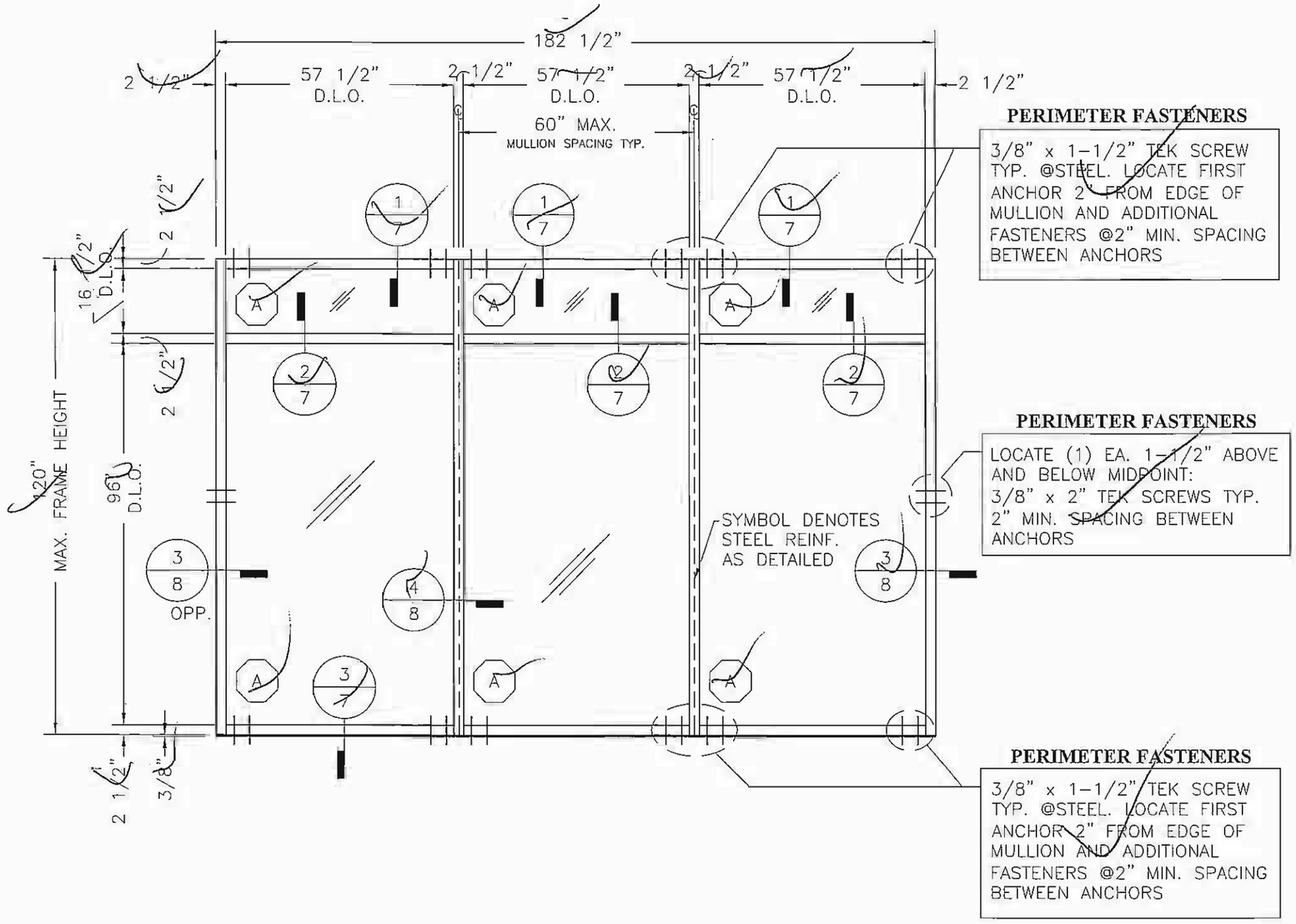

E1 - LIGHT MULLION WITH STEEL - LONG SPAN

TESTING:
AIR, WATER, STATIC, IMPACT, AND CYCLE

MAX. ALLOWABLE DEFLECTION = 0.667"

DESIGN PRESSURE = +70/-80 PSF

WATER TEST AT 15 PSF

AIR @ 6.24 P.S.F.

STEEL TEST BUCK

0 1'-4" 2'-8" 5'-4"
SCALE: 3/8"=1'-0"

Hurricane Test Laboratory, LLC

AS TESTED UNLESS OTHERWISE NOTED

Date 3-12-07
Job# 0402-1105-06

REV	BY	DATE	DESCRIPTION
---	---	---	---

Coral
Architectural Products
3010 RICE MINE ROAD, TUSCALOOSA, AL 35406
PHONE: 800-772-7737 FAX: 800-255-7320

HTL TEST REPORT DRAWINGS FOR
FL500 WINDOW WALL SYSTEM
PROTOCOLS: PA201/202/203
CENTER GLAZED IMPACT

FRAMING ELEVATIONS

DATE		
2/8/2007		
DRAWN PCH	CHECKED JDW	APPROVED JDW
PROJECT NO. HTL TEST		
DRAWING NO. FL500-01		
SHEET 2 OF 9		

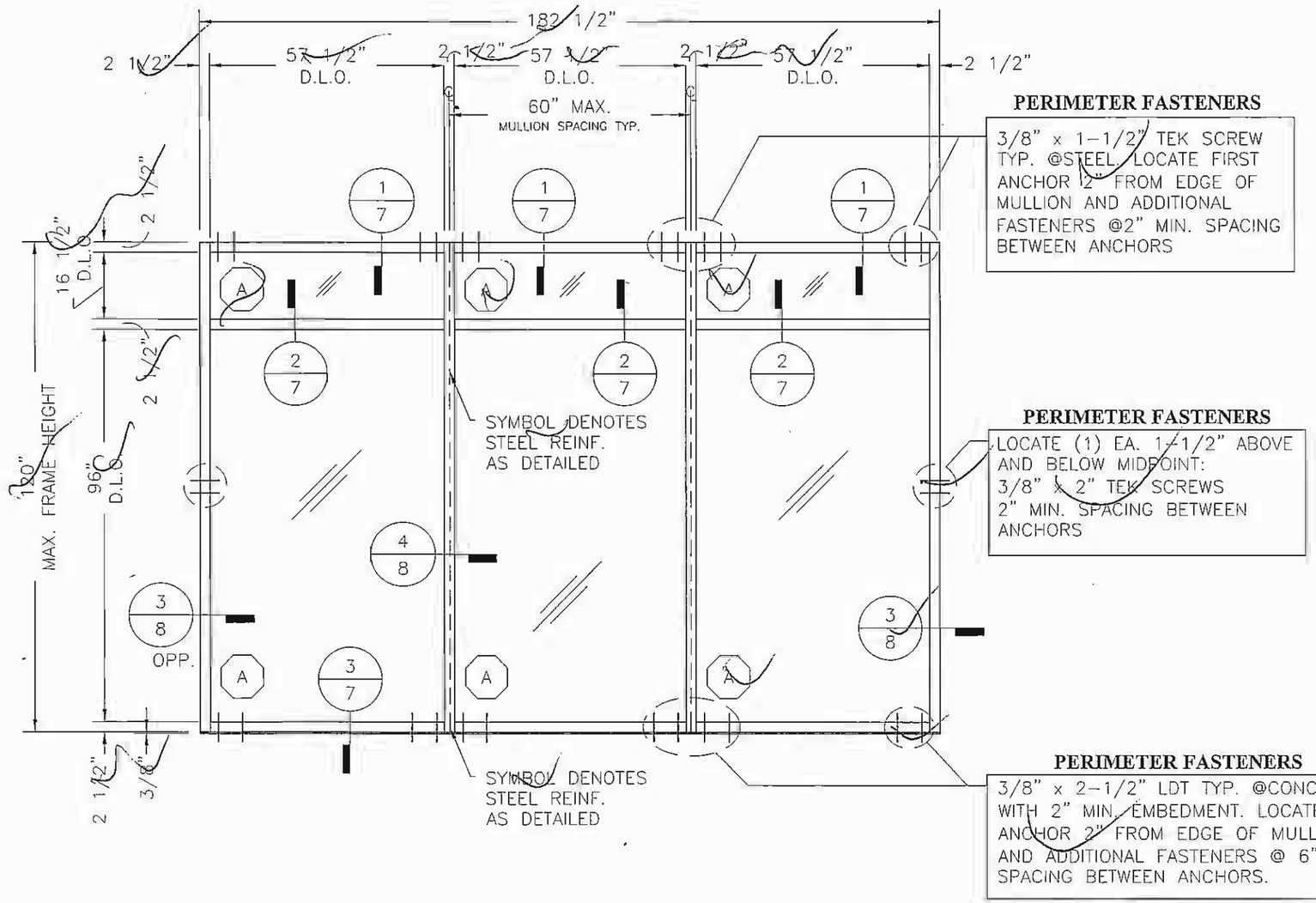

E2 - LIGHT MULLION WITH STEEL - LONG SPAN

TESTING:
IMPACT, AND CYCLE

MAX. ALLOWABLE DEFLECTION = 0.667"

DESIGN PRESSURE = +70/-80 PSF

STEEL AND CONCRETE TEST BUCK
2500 P.S.I. CONRETE @ SILL

0 1'-4" 2'-8" 5'-4"
SCALE: 3/8"=1'-0"

Hurricane Test Laboratory, LLC

AS TESTED UNLESS OTHERWISE NOTED

Date 3-12-07
Job# 0402-1105-060

REV	BY	DATE	DESCRIPTION
---	---	---	---

Coral Architectural Products
3010 RICE MINE ROAD, TUSCALOOSA, AL 35406
PHONE: 800-772-7737 FAX: 800-255-7320

HTL TEST REPORT DRAWINGS FOR
FL500 WINDOW WALL SYSTEM
PROTOCOLS: PA201/202/203
CENTER GLAZED IMPACT

FRAMING ELEVATIONS

DATE 2/8/2007

DRAWN	CHECKED	APPROVED
PCH	JDW	JDW

PROJECT NO. HTL TEST

DRAWING NO. FL500-01

SHEET 3 OF 9

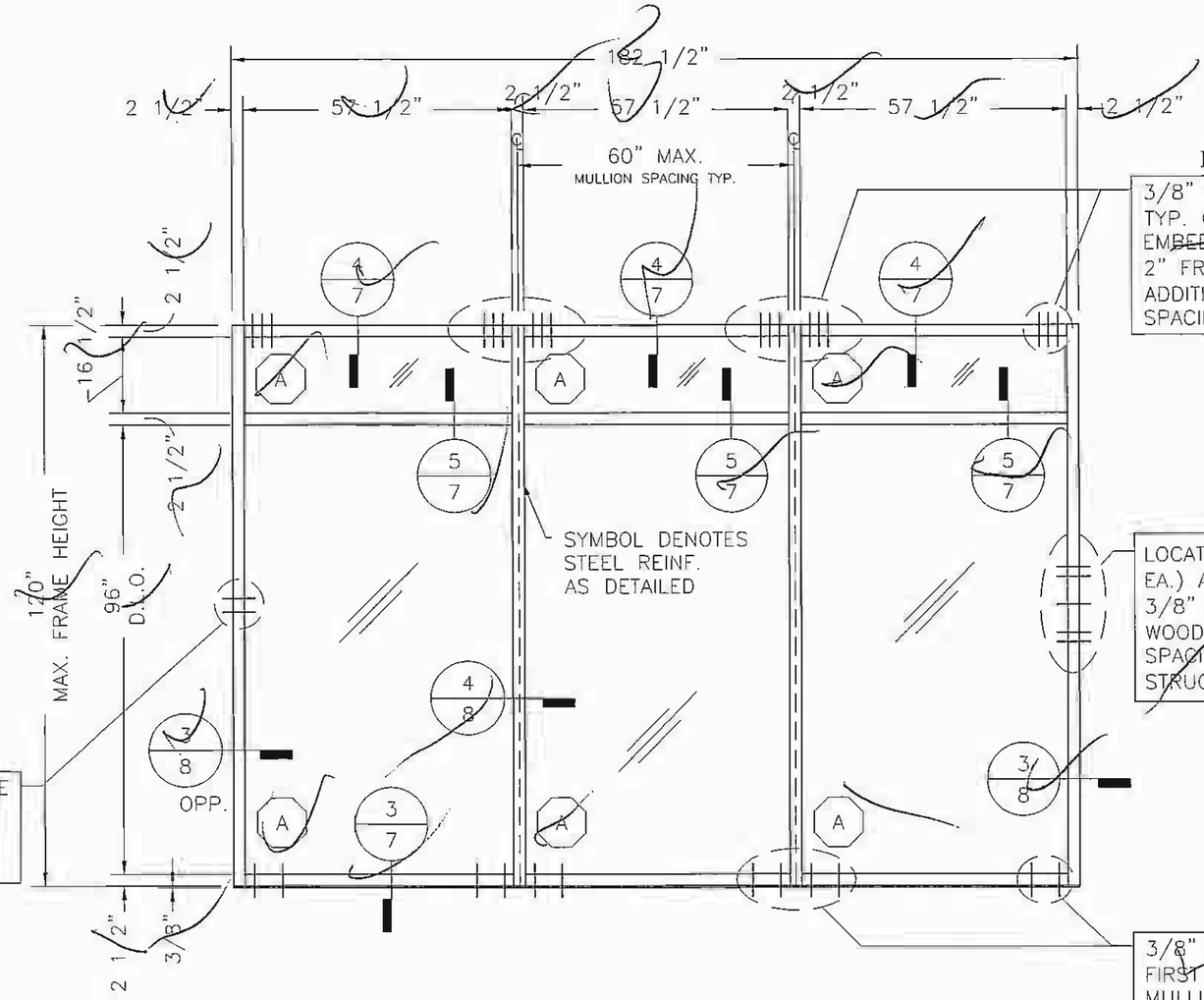

PERIMETER FASTENERS

3/8" x 3-1/2" LAG BOLTS TYP. @WOOD WITH 3" MIN. EMBEDMENT. LOCATE FIRST ANCHOR 2" FROM EDGE OF MULLION AND ADDITIONAL FASTENERS @ 2" MIN. SPACING BETWEEN ANCHORS.

PERIMETER FASTENERS

LOCATE (1 EA.) @ MID-POINT & (2 EA.) ABOVE AND BELOW MID-POINT. 3/8" X 3 1/2" LAG BOLTS TYP. @ WOOD - 3" MIN. EMBEDMENT 2" MIN SPACING BETWEEN ANCHORS. WOOD STRUCTURE IS MIN. #2 SYP

PERIMETER FASTENERS

LOCATE (1) EA. 1-1/2" ABOVE AND BELOW MIDPOINT: 3/8" x 2" TEK SCREWS TYP. AT STEEL. 2" MIN. SPACING

PERIMETER FASTENERS

3/8" x 1-1/2" TEK @STEEL. LOCATE FIRST ANCHOR 2" FROM EDGE OF MULLION AND ADDITIONAL FASTENERS @ 6" MIN. SPACING BETWEEN ANCHORS.

E3 - LIGHT MULLION WITH STEEL - LONG SPAN

TESTING:
IMPACT, AND CYCLE

MAX. ALLOWABLE DEFLECTION = 0.667"

DESIGN PRESSURE = +70/-80 PSF

STEEL/WOOD TEST BUCK
WOOD @HEAD AND RIGHT JAMB

0 1'-4" 2'-8" 5'-4"
SCALE: 3/8"=1'-0"

Hurricane Test Laboratory, LLC

AS TESTED UNLESS OTHERWISE NOTED
Date 3-12-07
Job# 0402-1105-010

REV	BY	DATE	DESCRIPTION
—	—	—	—

Coral Architectural Products
3010 RICE MINE ROAD, TUSCALOOSA, AL 35405
PHONE: 800-772-7737 FAX: 800-255-7320

HTL TEST REPORT DRAWINGS FOR
FL500 WINDOW WALL SYSTEM
PROTOCOLS: PA201/202/203
CENTER GLAZED IMPACT

FRAMING ELEVATIONS

DATE 2/8/2007
DRAWN PCH | CHECKED JDW | APPROVED JDW
PROJECT NO. HTL TEST
DRAWING NO. FL500-01
SHEET 4 OF 9

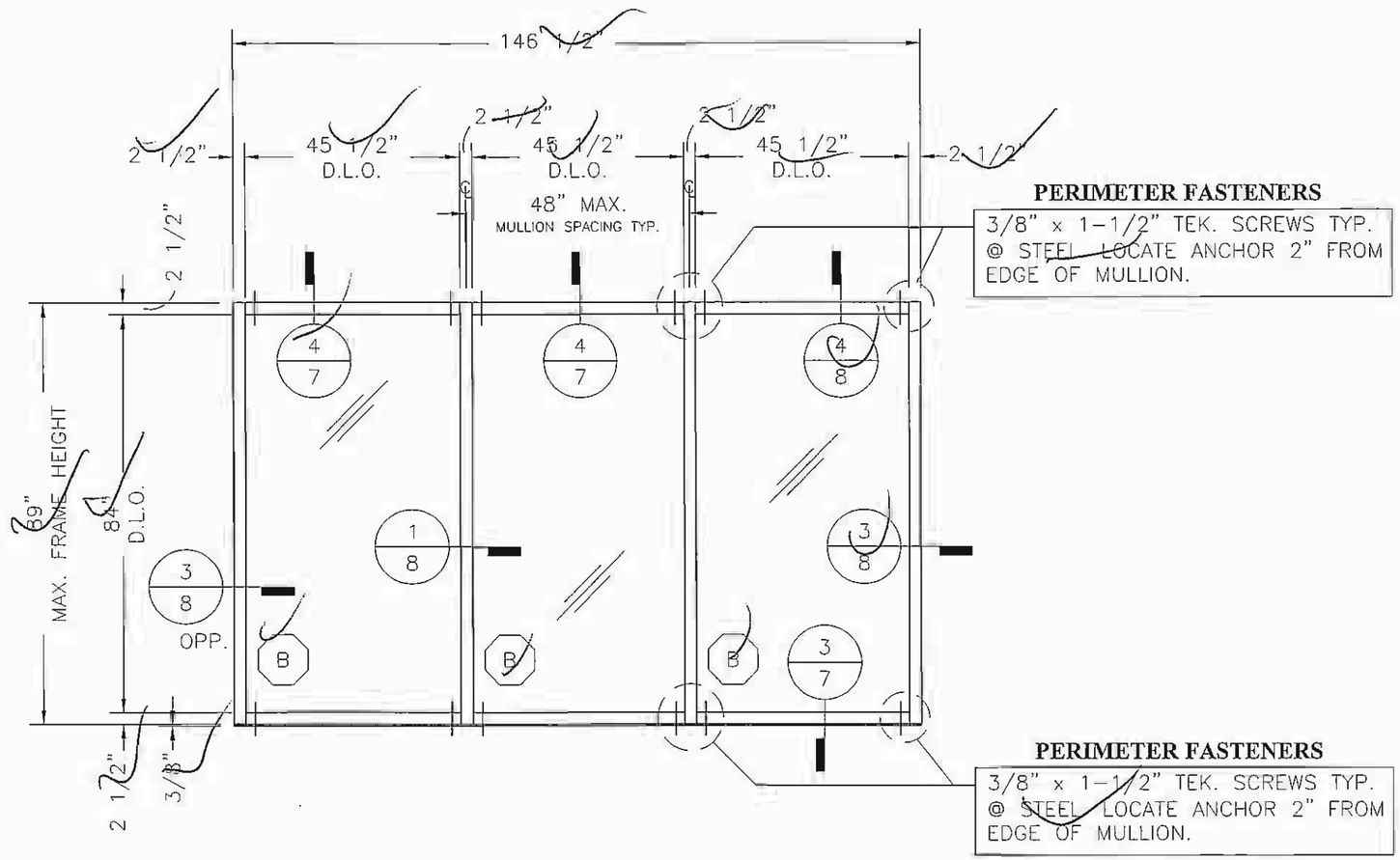

E4 - LIGHT MULLION WITHOUT STEEL - SHORT SPAN

TESTING:
STATIC, IMPACT, AND CYCLE

MAX. ALLOWABLE DEFLECTION = 0.494"

DESIGN PRESSURE = +65/−65 PSF

STEEL TEST BUCK

0 1'-4" 2'-8" 5'-4"
SCALE: 3/8"=1'-0"

Hurricane Test Laboratory, LLC

AS TESTED UNLESS OTHERWISE NOTED
Date 3-12-07
Job# 0402-1105-06

REV	BY	DATE	DESCRIPTION
1	PCH	8/25/06	REVISED

Coral
Architectural Products
3010 RICE MINE ROAD, TUSCALOOSA, AL 35406
PHONE: 800-772-7737 FAX: 800-255-7320

HTL TEST REPORT DRAWINGS FOR
FL500 WINDOW WALL SYSTEM
PROTOCOLS: PA201/202/203
CENTER GLAZED IMPACT

FRAMING ELEVATIONS

DATE 2/8/2007
DRAWN PCH | CHECKED JDW | APPROVED JDW
PROJECT NO. HTL TEST
DRAWING NO. FL500-01
SHEET 5 OF 9

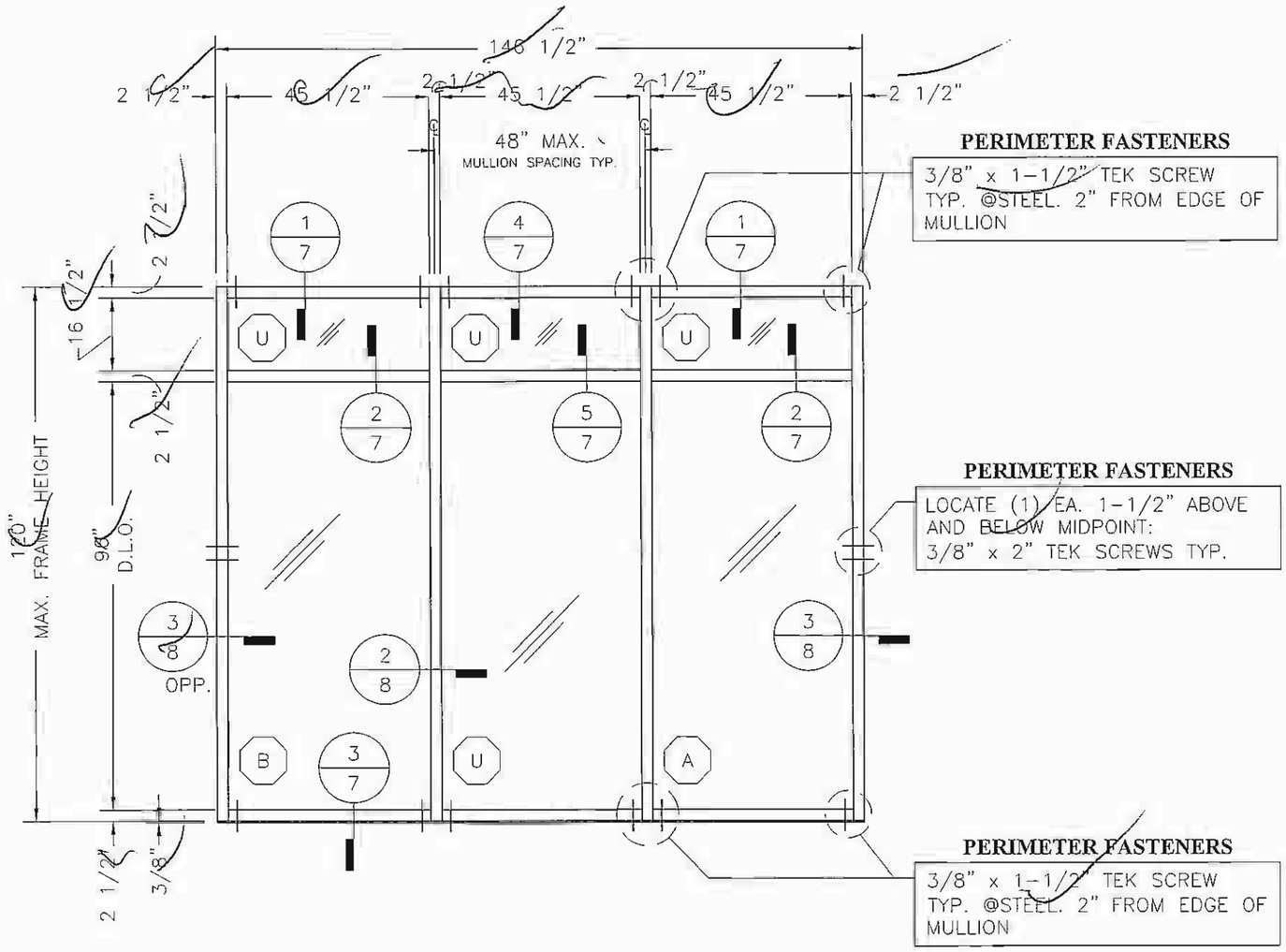

E6 - HEAVY MULLION WITHOUT STEEL - LONG SPAN

TESTING:
STATIC, IMPACT, AND CYCLE

MAX. ALLOWABLE DEFLECTION = 0.667"

DESIGN PRESSURE = +60/-60 PSF

STEEL TEST BUCK

0 1'-4" 2'-8" 5'-4"
SCALE: 3/8"=1'-0"

Hurricane Test Laboratory, LLC.

AS TESTED UNLESS OTHERWISE NOTED

Date 3-12-07
Job# 0402-1105-010

REV	BY	DATE	DESCRIPTION
---	---	---	---

Coral Architectural Products
3010 RICE MINE ROAD, TUSCALOOSA, AL 35406
PHONE: 800-772-7737 FAX: 800-255-7320

HTL TEST REPORT DRAWINGS FOR
FL500 WINDOW WALL SYSTEM
PROTOCOLS: PA201/202/203
CENTER GLAZED IMPACT

FRAMING ELEVATIONS

DATE 2/8/2007

DRAWN	CHECKED	APPROVED
PCH	JDW	JDW

PROJECT NO. HTL TEST

DRAWING NO. FL500-01

SHEET 6 OF 9

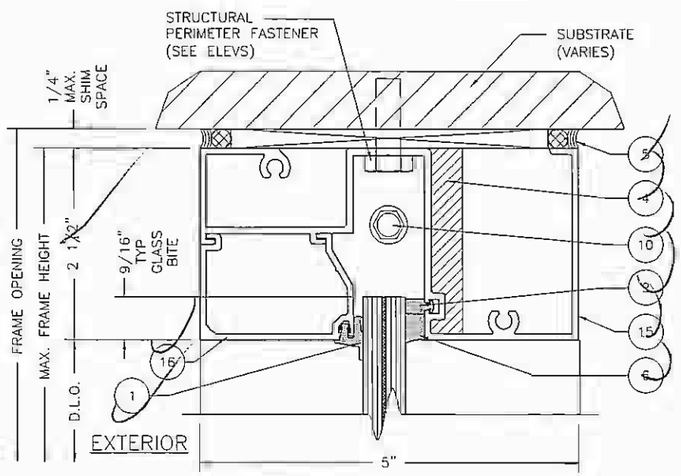

1 – HEAD
1:2

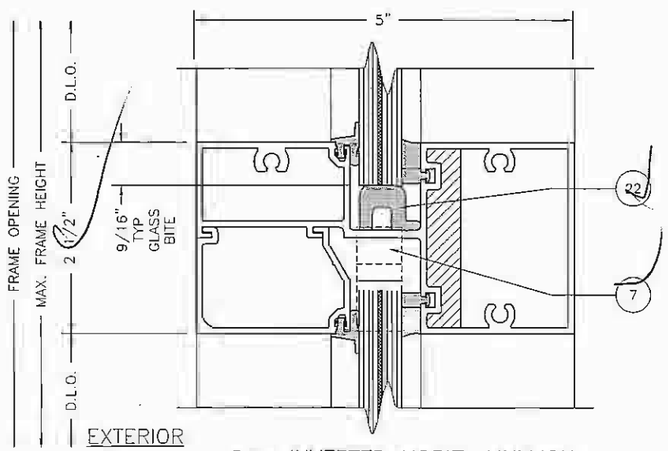

2 – INVERTED HORIZ. MULLION
1:2

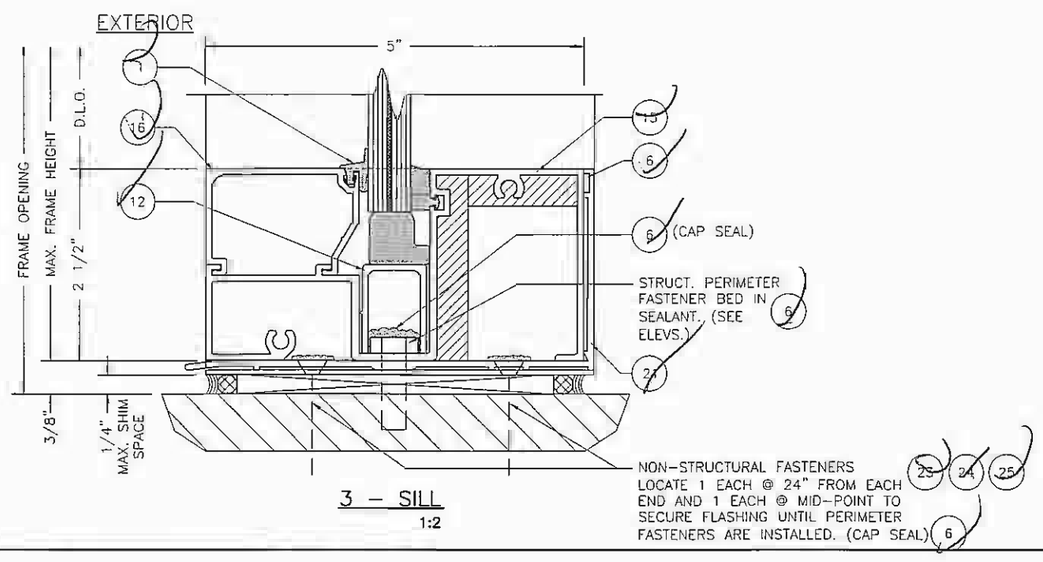

3 – SILL
1:2

1 TYPICAL EXTERIOR GASKET	5 TYPICAL PERIMETER SEALANT
2 TYPICAL INTERIOR GASKET	6 TYPICAL INTERIOR SEALANT @GLASS
4 TYPICAL @ALL JOINT INTERSECTIONS	8 TYPICAL AT ALL SPLINES

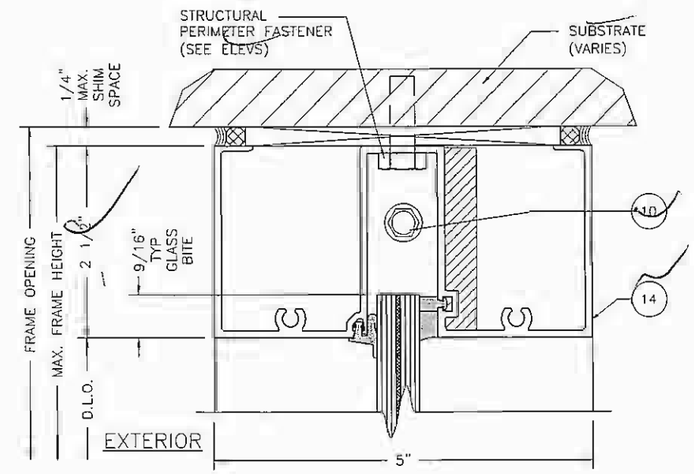

4 – ALTERNATE HEAD
1:2

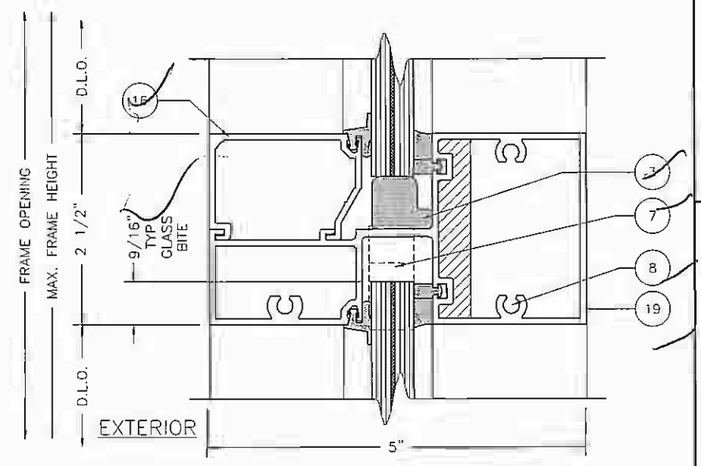

5 – HORIZ. MULLION
1:2

Hurricane Test Laboratory, LLC

AS TESTED UNLESS OTHERWISE NOTED

Date 3-12-07
Job# 0402-1105-07

REV	BY	DATE	DESCRIPTION

Coral
Architectural Products
3010 RICE MINE ROAD, TUSCALOOSA, AL 35405
PHONE: 800-772-7737 FAX: 800-255-7120

HTL TEST REPORT DRAWINGS FOR
FL500 WINDOW WALL SYSTEM
PROTOCOLS: PA201/202/203
CENTER GLAZED IMPACT

FRAMING DETAILS

DATE		
2/8/2007		
DRAWN PCH	CHECKED JDW	APPROVED JDW

PROJECT NO. HTL TEST

DRAWING NO. FL500-01

SHEET 7 OF 9

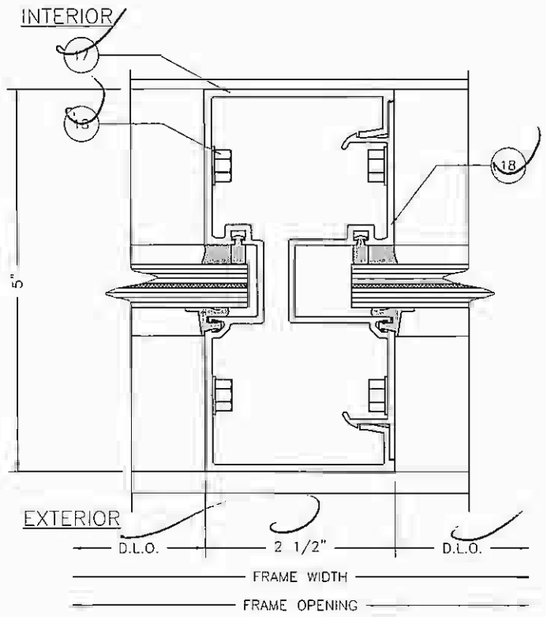

1 – VERT. MULLION
1:2

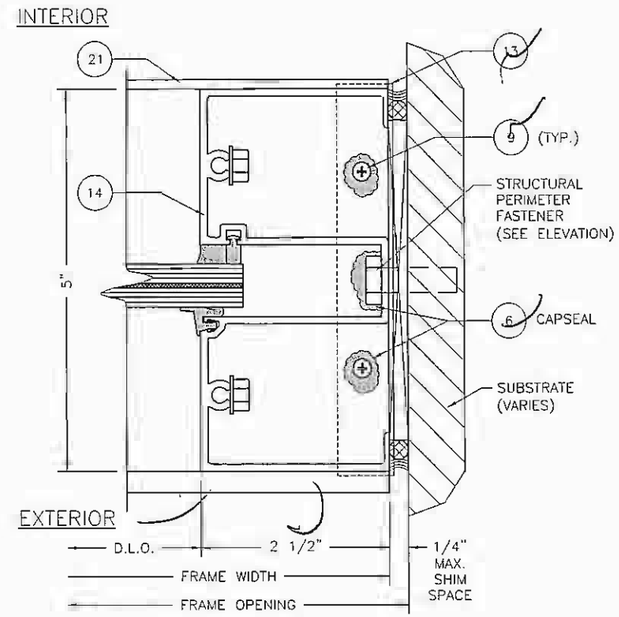

3 – JAMB
1:2

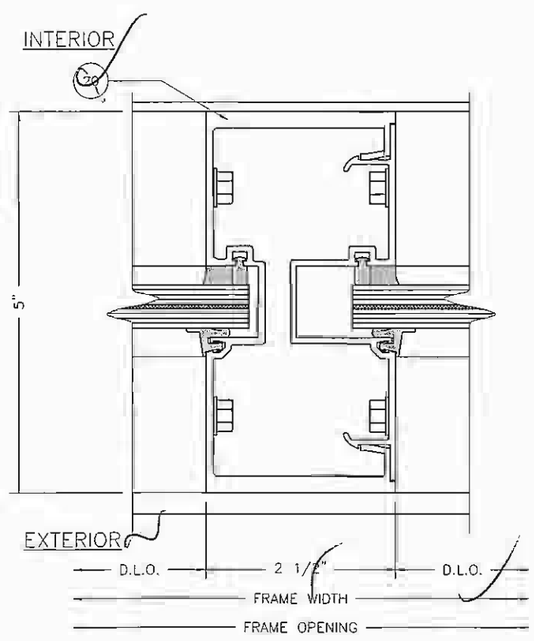

2 – HEAVY VERT. MULLION
1:2

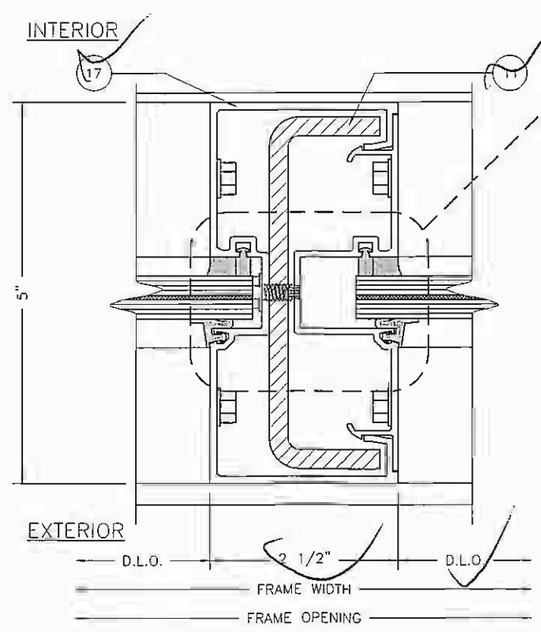

4 – VERT. MULLION WITH STEEL
1:2

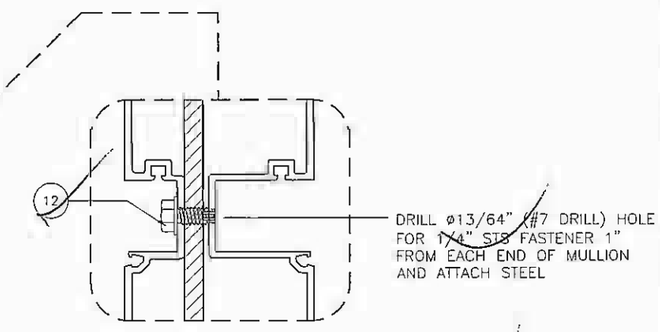

STEEL ATTACHMENT

NOTE:
IF FASTENER IS FINE THREAD, DRILL ø7/32" (#3 DRILL) HOLE

Hurricane Test Laboratory, LLC

AS TESTED UNLESS OTHERWISE NOTED
Date 3-12-07
Job# 0402-1105-06

REV	BY	DATE	DESCRIPTION
---	---	---	---

Coral Architectural Products
3010 RICE MINE ROAD, TUSCALOOSA, AL 35406
PHONE: 800-772-7737 FAX: 800-255-7320

HTL TEST REPORT DRAWINGS FOR
FL500 WINDOW WALL SYSTEM
PROTOCOLS: PA201/202/203
CENTER GLAZED IMPACT

FRAMING DETAILS

DATE		
2/8/2007		
DRAWN PCH	CHECKED JDW	APPROVED JDW
PROJECT NO. HTL TEST		
DRAWING NO. FL500-01		
SHEET 8 OF 9		

BILL OF MATERIALS

ITEM NO.	P/N	DESCRIPTION	DIMENSIONS	MATERIAL	MANUFACTURER	NOTES
1	NG1	EXTERIOR GLAZING GASKET	.120 SPACE	EPDM	VARIES	
2	NG14	INTERIOR SPACER GASKET	.25 X .188	EPDM	VARIES	
3	SB13	SETTING BLOCK @ SILL & HORIZONTAL	.800 X .688 X 4"	EPDM	VARIES	2 PER LITE
4	SM5601	JOINT SEALANT TAPE	.50 X .125 X VARIES	BUTYL	SCHNEE-MOOREHEAD	
5	795	SILICONE- PERIMETER SEALANT	FILL SPACE	SILICONE	DOW CORNING	USED AT PERIMETER
6	995	SILICONE -GLASS TO METAL	FILL SPACE	SILICONE	DOW CORNING	GLASS TO METAL
7	WD200-1	WATER DIVERTER	1.358 X .594 X .050	PLASTIC	CORAL INDUSTRIES, INC.	USED AT INTERMEDIATE HORIZONTAL
8	AS16	FASTENER	#14 X 1 HHSTS	STEEL	VARIES	TYPICAL SPLINE SCREW VERTICAL/HORIZONTAL JOINTS
9	AS21	FASTENER	#6 X 3/8" PPH	STEEL	VARIES	ATTACH ED519-1
10	AS38	FASTENER	#10-24 X3/8 HH	STEEL	VARIES	ATTACH SR504 TO FL504
11	SR504	STEEL REINFORCEMENT	1.25 X 4.562 X .25	A36 STEEL	VARIES	STEEL REINFORCEMENT FOR FL504
12	CS500-1	SETTING CHAIR	1.156 X .844 X .078	6063-T6 ALUMINUM	CORAL INDUSTRIES, INC.	2 PER LITE AT SILL
13	ED519-1	SILL FLASHING END DAM	2.50 X 1.00 X .062	6063-T6 ALUMINUM	CORAL INDUSTRIES, INC.	5.00 LONG
14	FL501	HEAD OR WALL JAMB	2.5 X 5.00 X .094	6063-T6 ALUMINUM	CORAL INDUSTRIES, INC.	
15	FL502	SILL OR HEAD	2.5 X 4.98X .080	6063-T6 ALUMINUM	CORAL INDUSTRIES, INC.	
16	FL503	GLASS STOP	1.25 X 2.021 X .078	6063-T6 ALUMINUM	CORAL INDUSTRIES, INC.	
17	FL504	STD. VERTICAL MULLION / DOOR JAMB	2.5 X 5.00 X .094	6063-T6 ALUMINUM	CORAL INDUSTRIES, INC.	
18	FL505	OPEN BACK MULLION FILLER	.681 X 4.67 X .080	6063-T6 ALUMINUM	CORAL INDUSTRIES, INC.	
19	FL506	INTERMEDIATE HORIZONTAL	2.5 X 4.98 X .080	6063-T6 ALUMINUM	CORAL INDUSTRIES, INC.	
20	FL516	HEAVY VERTICAL MULLION	2.5 X 5.00 X .213	6063-T6 ALUMINUM	CORAL INDUSTRIES, INC.	
21	FL519	SUBSILL FLASHING	2.62 X 5.402 X .084	6063-T6 ALUMINUM	CORAL INDUSTRIES, INC.	
22	SB20	SETTING BLOCK @ INVERTED HORIZONTAL	.800 X .548 X 4"	EPDM	VARIES	2 PER LITE
23	FASTENER	FOR ATTACHING ITEM # 21 TO CONCRETE SUBSTRATE	#12 X 2" FHP TAPCON	STEEL	VARIES	1" MINIMUM EMBEDMENT NON-STRUCTURAL
24	FASTENER	FOR ATTACHING ITEM # 21 TO WOOD SUBSTRATE	#12 X 2" FHP WD SCREW	STEEL	VARIES	1" MINIMUM EMBEDMENT NON-STRUCTURAL
25	AS27	FASTENER	#12 X 1-1/2" #3 S.D. FHP	STEEL	VARIES	1" MINIMUM EMBEDMENT NON-STRUCTURAL

GLAZING SCHEDULE

GLASS DESCRIPTION	NOA	MANUFACTURER	GLASS MARK	MAXIMUM D.L.O. SIZE (INCHES)	SQUARE FEET	MAXIMUM DESIGN PRESSURE (PSF)
1/4" H.S. AT INNER/OUTER FACES W/0.075 SOLUTIA VS02 INTERLAYER	03-0514.15	SOLUTIA	A	57-1/2 x 96	38.3	+80/-80
1/4" H.S. AT INNER/OUTER FACES W/0.090 PVB SOLUTIA INTERLAYER	03-0105.02	SOLUTIA	B	45-1/2 x 96	30.3	+60/-60
1/4" H.S. AT INNER/OUTER FACES W/0.120 UVEKOL "S" INTERLAYER	3-1117.05	UVEKOL	U	45-1/2 x 96	30.3	+60/-60
1/4" H.S. AT INNER/OUTER FACES W/0.090 PVB SOLUTIA INTERLAYER	03-0105.02	SOLUTIA	B	45-1/2 x 84	26.5	+65/-65

Hurricane Test Laboratory, LLC

AS TESTED UNLESS OTHERWISE NOTED

Date 3-12-07

Job# 0402-1105-06

REV	BY	DATE	DESCRIPTION
---	---	---	---

Coral Architectural Products
3010 RICE MINE ROAD, TUSCALOOSA, AL 35403
PHONE: 800-772-7737 FAX: 800-255-7320

HTL TEST REPORT DRAWINGS FOR
FL500 WINDOW WALL SYSTEM
PROTOCOLS: PA201/202/203
CENTER GLAZED IMPACT
BILL OF MATERIALS AND GLAZING SCHEDULE

DATE 2/8/2007

DRAWN	CHECKED	APPROVED
PCH	JDW	JDW

PROJECT NO. HTL TEST

DRAWING NO. FL500-01

SHEET 9 OF 9

S:\Assemblies And Fabrications\C.A.P\DIE DWGS\GLAZING COMPONENTS\NG1.dwg, 5/10/2007 3:21:06 PM, phowel, \\ipp://192.168.9.25\CAP_Prt, Co

Coral Architectural Products			
PART NAME: GLAZING GASKET	DRAWN: SCC		DATE: 12/21/2006
PART NO.: NG1	CHKD: JDW	APP.: JDW	SCALE: 4:1

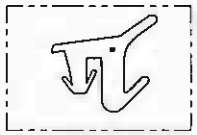

ACTUAL SIZE

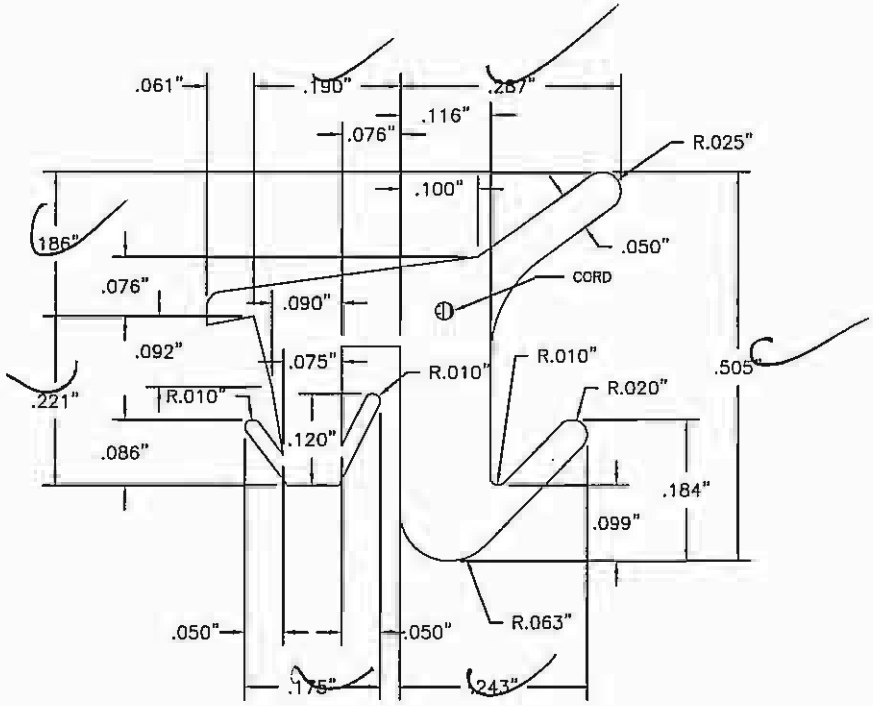

NOTES:
1. MATERIAL: EPDM
2. COLOR: BLACK
3. DUROMETER: 70±5
4. TREMCO DIE # TR-5114E

NO	REVISION	BY	DATE
#	----------	---	--/--/--

Hurricane Test Laboratory, LLC
AS TESTED UNLESS
OTHERWISE NOTED

Date 5-15-07
Job# 0402-1105-016

S:\Assemblies And Fabrications\C.A.P\DIE DWGS\GLAZING COMPONENTS\NG14.dwg, 5/10/2007 3:21:31 PM, phowel, \\ipp://192.168.9.25\CAP_Prt, C

Coral ▪ Architectural Products ▪			
PART NAME EXTERIOR PRESSURE WALL GASKET	DRAWN PCH		DATE 7/18/2006
PART NO. NG14	CHKD. JDW	APP. JDW	SCALE 4:1

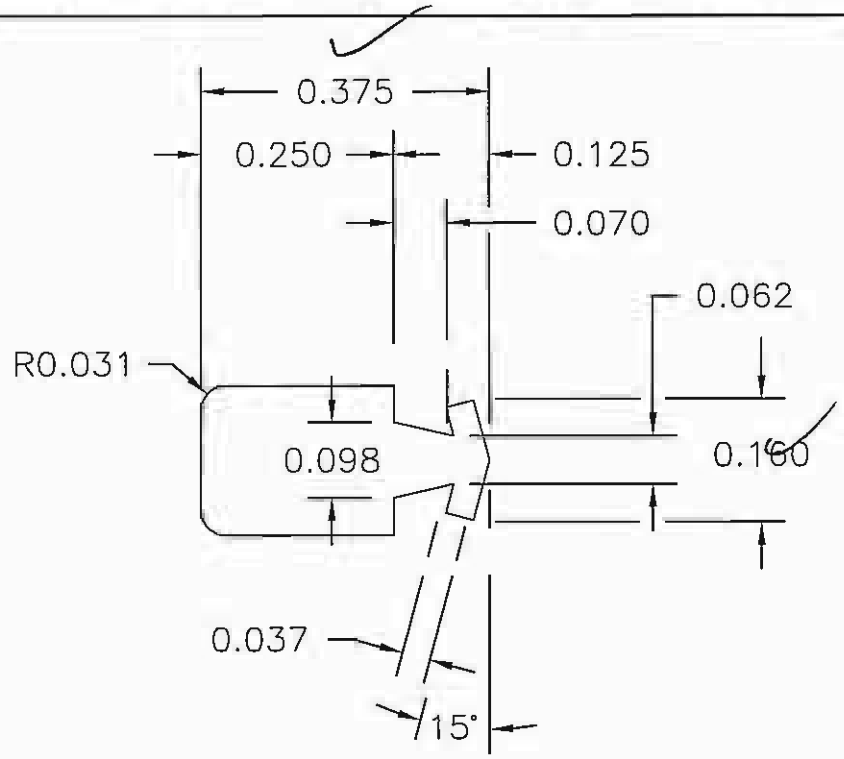

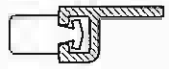

ACTUAL SIZE

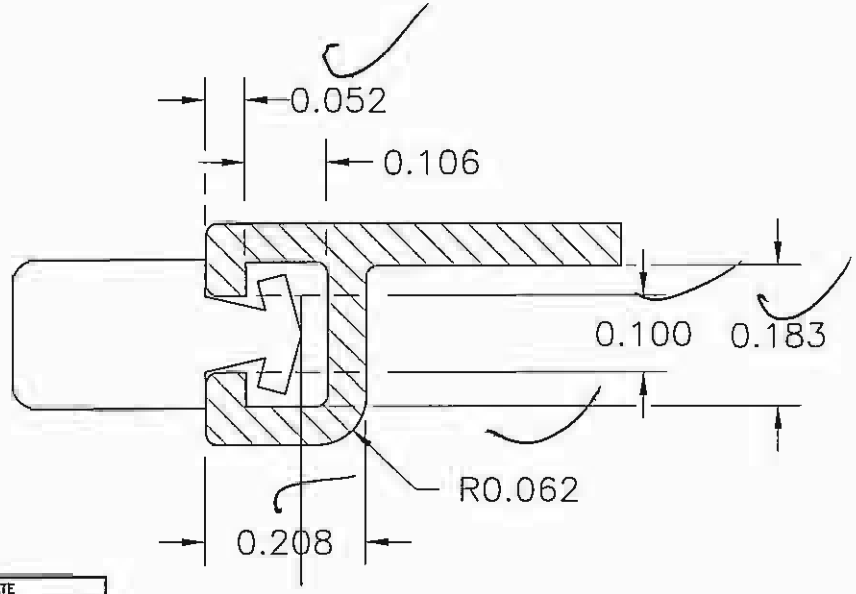

Hurricane Test Laboratory, LLC
AS TESTED UNLESS
OTHERWISE NOTED

Date 5-15-07
Job# 0402-1105-06

NOTES:
1. MATERIAL TO BE: EPDM
2. DUROMETER: 70±5
3. COLOR: BLACK

NO	REVISION	BY	DATE
--	----------	---	--/--/--

S:\Assemblies And Fabrications\C.A.P\DIE DWGS\GLAZING COMPONENTS\SB13.dwg, 5/10/2007 3:21:52 PM, phowel, \\ipp://192.168.9.25\CAP_Prt, C

Coral ▪ Architectural Products ▪			
PART NAME SETTING BLOCK – 9/16" GLASS	DRAWN PCH		DATE 10/24/2006
PART NO. SB13	CHKD JDW	APP JDW	SCALE 4:1

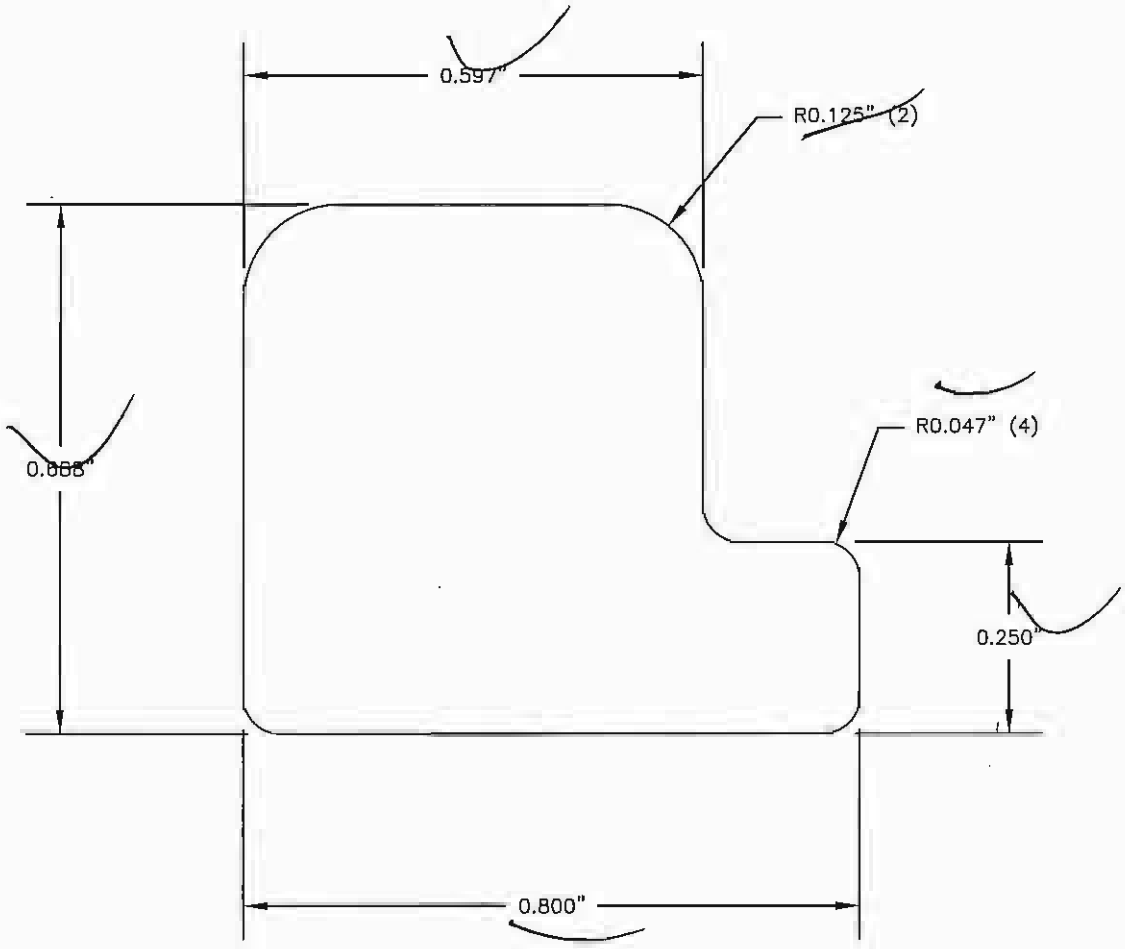

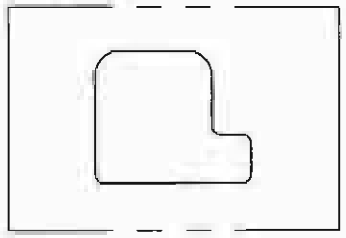

ACTUAL SIZE

NOTES:
1. MATERIAL TO BE: EPDM
2. COLOR: BLACK
3. DUROMETER: 85±5 SHORE "A" HARDNESS
4. CUT 4" LONG
5. PACK 100/BOX
6. TREMCO DIE TR–14274E
7. USE W/ FL500 SYSTEMS.

NO	REVISION	BY	DATE
#	----------	---	--/--/--

Hurricane Test Laboratory, LLC
AS TESTED UNLESS OTHERWISE NOTED

Date 5-15-07
Job# 0402-1105-06

S:\Assemblies And Fabrications\C.A.P\FABRICATION\SMALL PARTS\FABRICATED\WD200-1 WATER DIVERTER .25in.dwg, 5/10/2007 3:24:37 PM, pl

Coral ▪ Architectural Products ▪

PART NAME	DRAWN	DATE
WATER DIVERTER .25" GLAZE	SCC	10/25/2006
PART NO. WD200-1	CHKD. JDW / APP. JDW	SCALE 1:1

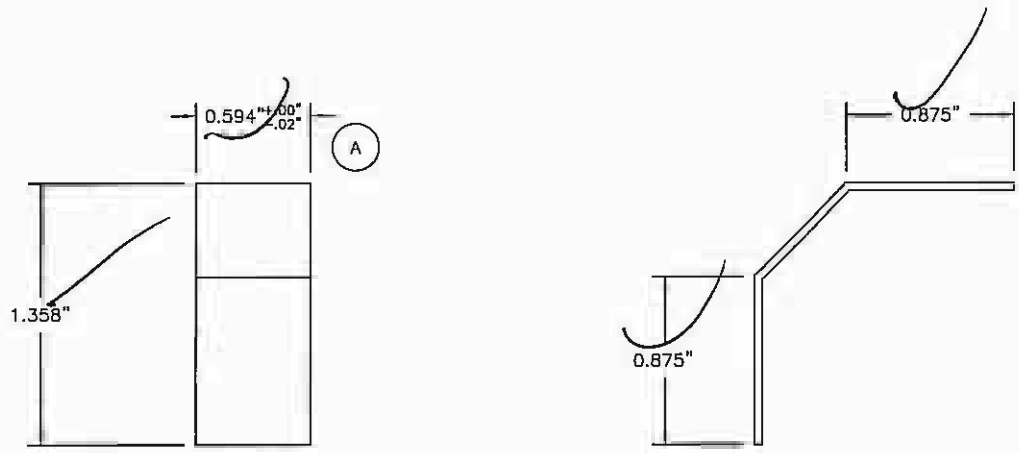

Hurricane Test Laboratory, LLC
AS TESTED UNLESS
OTHERWISE NOTED

Date 5-15-07
Job# 0402-1105-06

NOTES:
1. USED W/ FL200 AND FL500 SYSTEMS.
2. MATERIAL: BLACK ABS PLASTIC

B

NO	REVISION	BY	DATE
A	CHANGED WIDTH & TOLERANCE	SCC	11/15/05
B	MATERIAL WAS RIDGID VINYL	PCH	05/23/06

PARTS CROSS REFERENCE LIST

CATALOG NO.	PART NO.	ORDER QTY
	WD2	8'-0"
	WD200-1	EA.
	WD200-2	50/BOX

S:\Assemblies And Fabrications\C.A.P\DIE DWGS\STEEL REINFORCING\SR504.dwg, 5/10/2007 3:25:24 PM, phowel, \\ipp://192.168.9.25\CAP_Prt, Co

Coral Architectural Products			
PART NAME: STEEL REINFORCEMENT	DRAWN: PCH		DATE: 9/21/2006
PART NO.: SR504	CHKD: JDW	APP: JDW	SCALE: 1:1

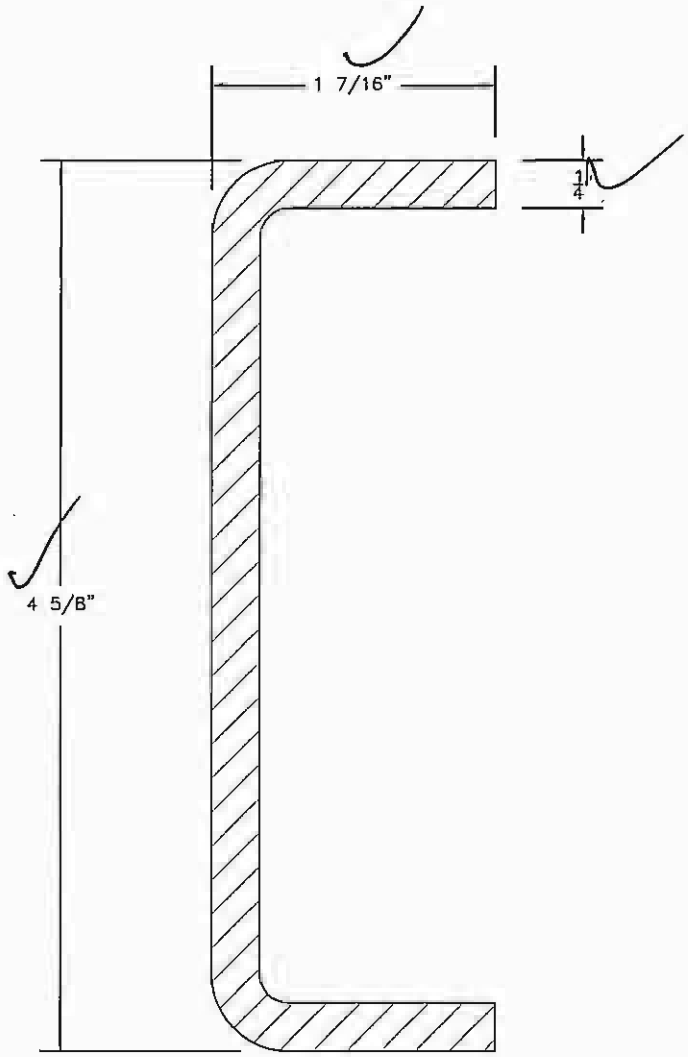

Hurricane Test Laboratory, LLC
AS TESTED UNLESS
OTHERWISE NOTED

Date 5-15-07
Job# 0402-1105-06

SECTION PROPERTIES					
Ixx	4.695	in^4	Iyy	0.295	in^4
Sxx(max)	2.031	in^3	Syy(max)	0.752	in^3
Sxx(min)	2.031	in^3	Syy(min)	0.272	in^3
rxx	1.657	in	ryy	0.415	in
Area	1.710	in^2	Weight	2.011	lbs/ft
Perim.	14.180	in	Wall Thk.	0.250	in

NO	REVISION	BY	DATE
#	————	—	--/--/--

NOTES:
1. MATERIAL: GALVANIZED STEEL (PRIME IF NOT ABLE TO GALVANIZE)
2. FITS WITH FL504

S:\Assemblies And Fabrications\C.A.P\DIE DWGS\GLAZING COMPONENTS\SB20.dwg, 5/10/2007 4:04:22 PM, phowel, \\ipp://192.168.9.25\CAP_Prt, C

Coral ▪ Architectural Products ▪			
PART NAME SETTING BLOCK – 9/16" GLASS	DRAWN PCH		DATE 2/23/2007
PART NO. SB20	CHKD JDW	APP. JDW	SCALE 2:1

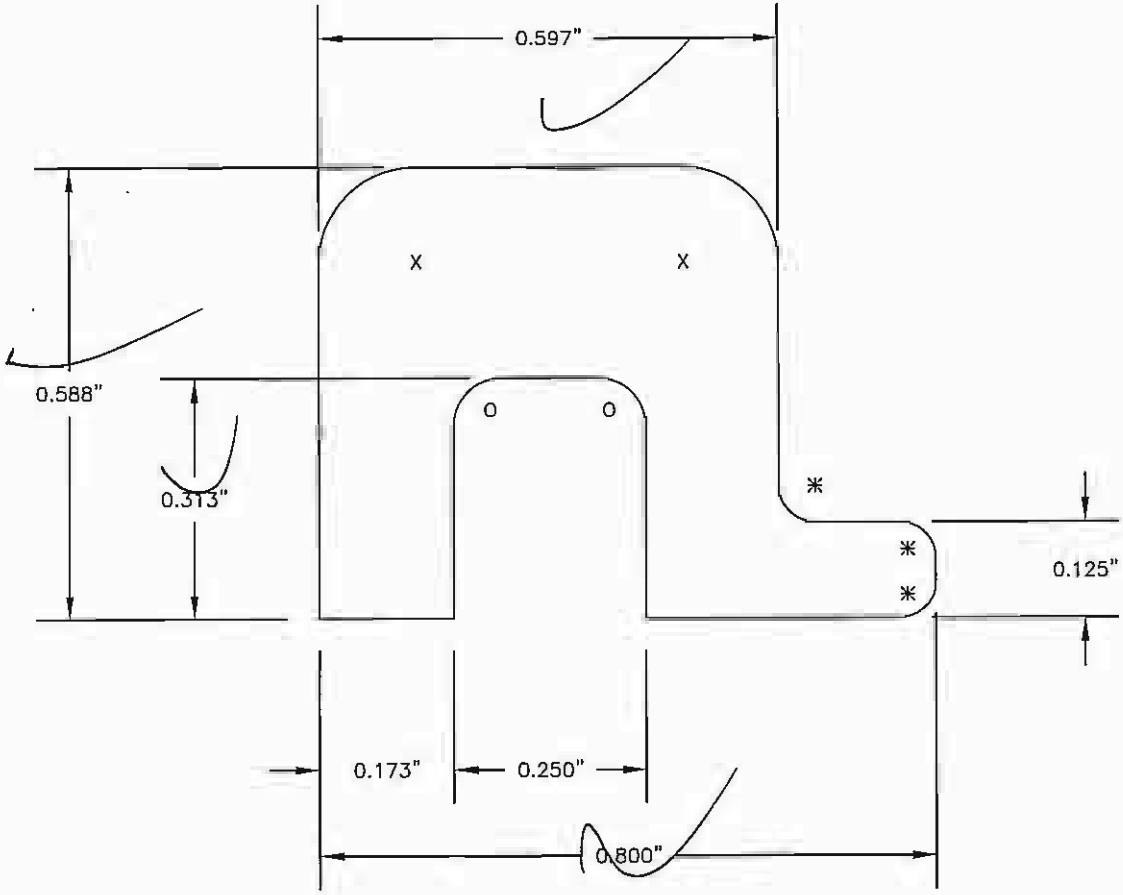

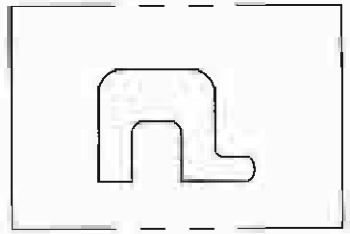

ACTUAL SIZE

X = DENOTES .125 RADIUS (2)
* = DENOTES .047 RADIUS (3)
O = DENOTES .063 RADIUS (2)

NOTES:
1. MATERIAL TO BE: EPDM
2. COLOR: BLACK
3. DUROMETER: 85 5 SHORE "A" HARDNESS
4. CUT 4" LONG±
5. PACK 100/BOX
6. TREMCO DIE =
7. USE W/ FL500 SYSTEM AT INVERTED HORIZONTAL.

NO	REVISION	BY	DATE
#	----------	—	--/--/--

Hurricane Test Laboratory, LLC
AS TESTED UNLESS
OTHERWISE NOTED

Date 5-15-07
Job# 0402-1105-06

Customer signature on this print indacates approval of design and dimensions as shown, and customer agrees to accept all legal responsibilities for patent and or trade mark infrigement related to this shape and hold (save) Keymark harmless from any claims, suits, actions or demands arising there from.
This drawing is the property of Keymark Corporation and may not be redistributed without written consent

*	STRUCTURAL STREAKING IS EXPECTED

UNIFORM PAINT COVERAGE NOT EXPECTED IN THIS AREA

STANDARD COMMERCIAL TOLERANCES FOR EXTRUDED PRODUCTS APPLY UNLESS SPECIFIED OTHERWISE

S-39284
Die Number

Design Number

ACTUAL SIZE

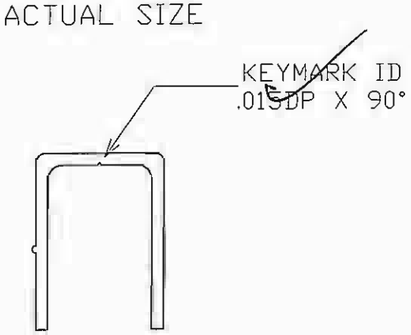

NO EXPOSED SURFACES

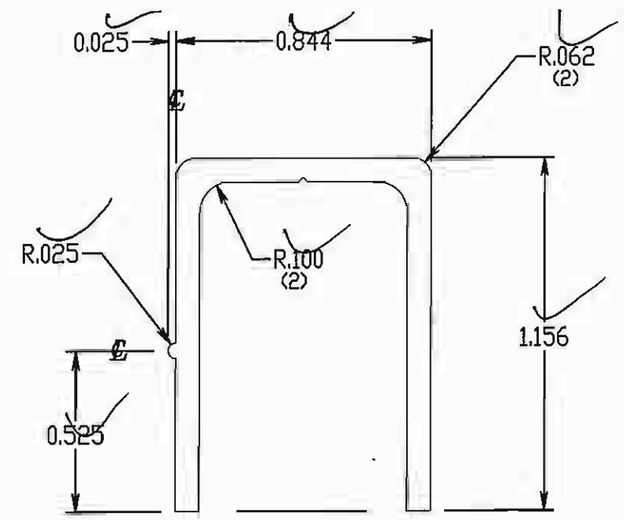

Hurricane Test Laboratory, LLC
AS TESTED UNLESS OTHERWISE NOTED
Date 5-15-07
Job# 06-02-1105-06

KEYMARK CORPORATION
FONDA, NEW YORK
FAX ENG.(518)853-3435 SALES(518)853-3130
TEL. (518) 853-3421 E-MAIL engny@keymarkcorp.com

Sym.	Revisions	Date
	PRINT CORRECTION	

Unspecified Wall Thickness: .078

.015 Break Ext. Corners Radius or as Noted

Customer: CORAL ARCH. PRODUCTS			Customer's Part Number: CS500
Job Name: HURRICANE IMPACT			
Part Title: SETTING CHAIR			Scale: 2:1
Alloy: 6063	Est. Area: 0.237 In^2	Finish Perimeter: 0.000 In	Date: 01-09-06
Temper: T-6	Est. Wt./Ft.: 0.284 Lbs	Est. Perimeter: 6.058 In	Drawn: A.D.
Cavity Size	Circle Size: 1.4 In	Exterior Perimeter: 6.058 In	Checked

Estimated For Reference Only	I_x =	I_y =	Alodine ☐	Type: 00				
	S_x =	S_y =	Crimp	Factor 21	Mill ■	Ano. ☐	Drnr. ☐	Drcn. ☐

Solid ■ Semi-hollow ☐ Class Hollow ☐ Class

Customer signature on this print indacates approval of design and dimensions as shown, and customer agrees to accept all legal responsibilities for patent and or trade mark infrignement related to this shape and hold (save) Keymark harmless from any claims, suits, actions or demands arising there from.
This drawing is the property of Keymark Corporation and may not be redistributed without written consent

*	STRUCTURAL STREAKING IS EXPECTED

UNIFORM PAINT COVERAGE NOT EXPECTED IN THIS AREA →

STANDARD COMMERCIAL TOLERANCES FOR EXTRUDED PRODUCTS APPLY UNLESS SPECIFIED OTHERWISE

S-39738
Die Number

Design Number

ACTUAL SIZE

NO EXPOSED SURFACES

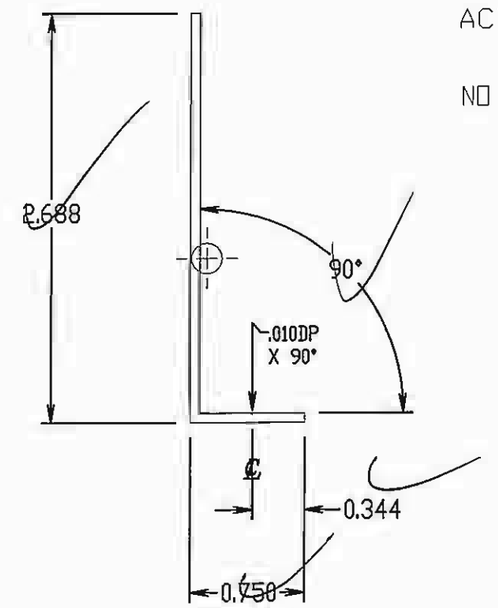

Hurricane Test Laboratory, LLC
AS TESTED UNLESS OTHERWISE NOTED
Date 5-15-07
Job# 04pz-1105-06

KEYMARK CORPORATION
FONDA, NEW YORK
FAX ENG.(518)853-3435 SALES(518)853-3130
TEL. (518) 853-3421 E-MAIL engny@keymarkcorp.com

Sym.	Revisions	Date
1	PRINT CORRECTION	04-16-06

Unspecified Wall Thickness: .062

.015 Break Ext. Corners Radius or as Noted

Customer: CORAL ARCH. PRODUCTS			Customer's Part Number: ED519
Job Name			
Part Title: SUBSILL FLASHING END DAM			Scale: 1:1
Alloy: 6063	Est. Area: 0.209 In²	Finish Perimeter: 0.000 In	Date: 03-23-06
Temper: T-6	Est. Wt./Ft.: 0.251 Lbs	Est. Perimeter: 6.884 In	Drawn: D.S.S.
Cavity Size	Circle Size: 2.8 In	Exterior Perimeter: 6.884 In	Checked: S.J.S.

Estimated For Reference Only	I_x = 0.159	I_y = 0.007	Alodine ☐	Type: 00						
	S_x = 0.147	S_y = 0.061	Crimp	Factor 27	Mill ■	Ano. ☐	Drnr. ☐	Drcn. ☐	Pc ☐	Solid ■ Semi-hollow ☐ Class Hollow ☐ Class

Customer signature on this print indacates approval of design and dimensions as shown, and customer agrees to accept all legal responsibilities for patent and or trade mark infrignement related to this shape and hold (save) Keymark harmless from any claims, suits, actions or demands arising there from. This drawing is the property of Keymark Corporation and may not be redistributed without written consent

*	STRUCTURAL STREAKING IS EXPECTED
	UNIFORM PAINT COVERAGE NOT EXPECTED IN THIS AREA

STANDARD COMMERCIAL TOLERANCES FOR EXTRUDED PRODUCTS APPLY UNLESS SPECIFIED OTHERWISE

S-39253
Die Number
Design Number

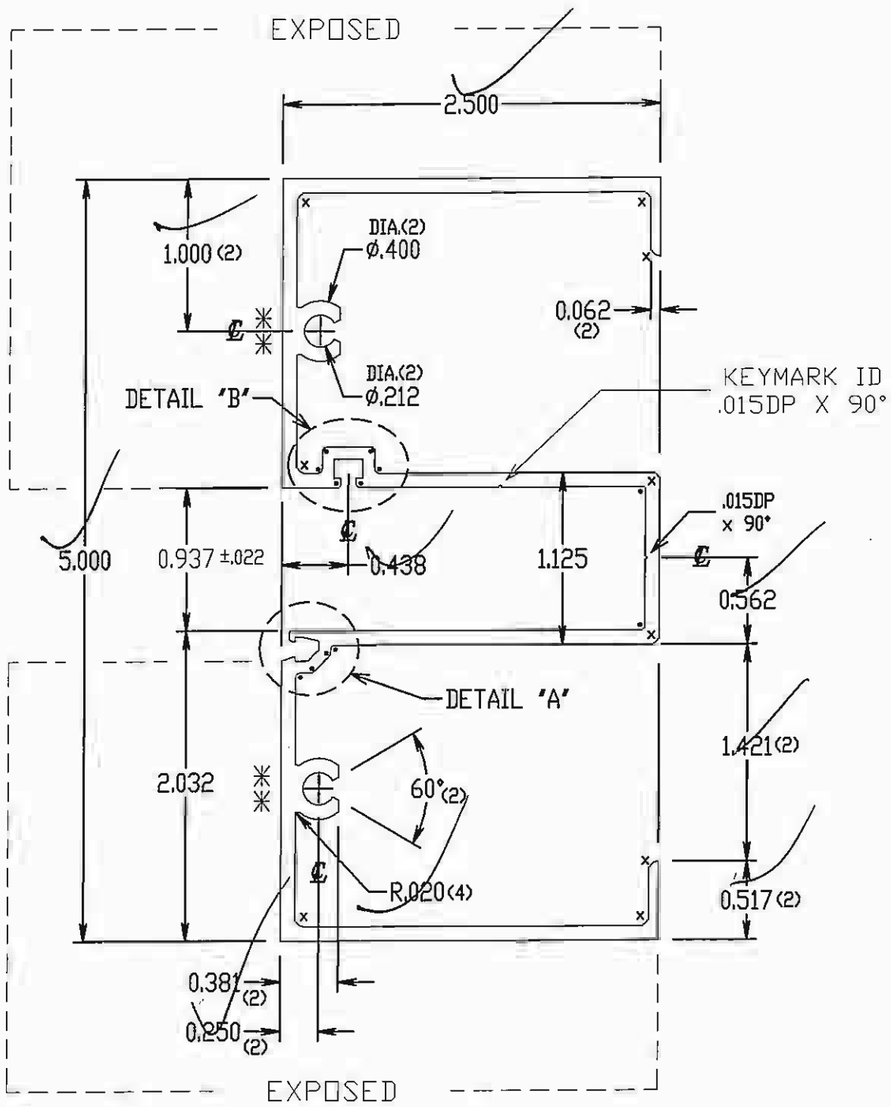

(•) DENOTES R .031 (12)
(x) DENOTES R .062 (9)

ACTUAL SIZE

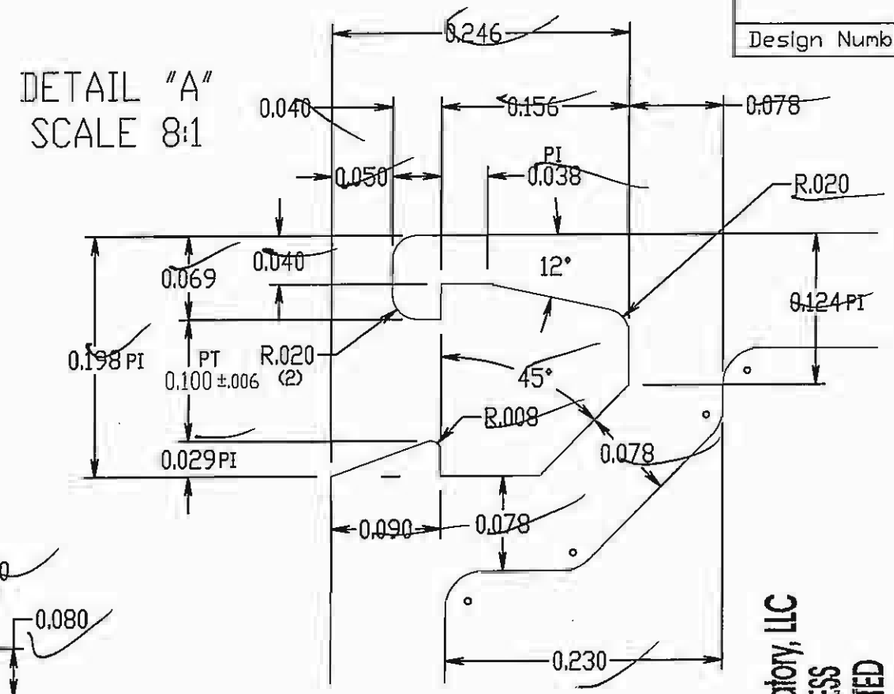

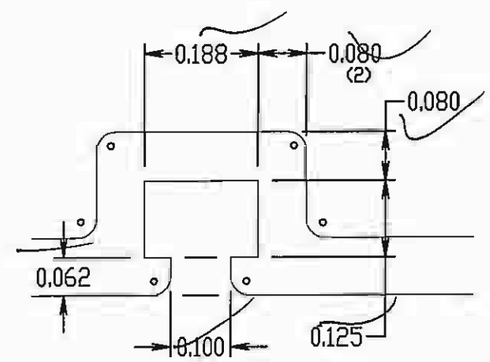

DETAIL "B"
SCALE 4:1

Hurricane Test Laboratory, LLC
AS TESTED UNLESS OTHERWISE NOTED
Date 5-15-07
Job# 0402-1105-010

KEYMARK CORPORATION
FONDA, NEW YORK
FAX ENG.(518)853-3435 SALES(518)853-3130
TEL. (518) 853-3421 E-MAIL engny@keymarkcorp.com

Sym.	Revisions	Date
	PRINT CORRECTION	

Unspecified Wall Thickness: .094 .010 Break Ext. Corners Radius or as Noted

Customer: CORAL ARCH. PRODUCTS			Customer's Part Number: FL501
Job Name: HURRICANE IMPACT			
Part Title: HEAD/JAMB MULLION			Scale: 1:1
Alloy: 6063	Est. Area: 1.589 In²	Finish Perimeter: 8.864 In	Date: 01-06-06
Temper: T-6	Est. Wt./Ft.: 1.907 Lbs	Est. Perimeter: 34.181 In	Drawn: JR
Cavity Size	Circle Size: 5.6 In	Exterior Perimeter: 34.181 In	Checked

Estimated For Reference Only	I_x =	I_y =	Alodine ☐	Type: 00						
	S_x =	S_y =	Crimp	Factor 18	Mill ☐	Ano. ☐	Drnr. ☐	Drcn. ■	Solid ■	Semi-hollow ☐ Class ☐ Hollow ☐ Class

Customer signature on this print indacates approval of design and dimensions as shown, and customer agrees to accept all legal responsibilities for patent and or trade mark infringement related to this shape and hold (save) Keymark harmless from any claims, suits, actions or demands arising there from.
This drawing is the property of Keymark Corporation and may not be redistributed without written consent

*	STRUCTURAL STREAKING IS EXPECTED
	UNIFORM PAINT COVERAGE NOT EXPECTED IN THIS AREA

STANDARD COMMERCIAL TOLERANCES FOR EXTRUDED PRODUCTS APPLY UNLESS SPECIFIED OTHERWISE

S-39254
Die Number
Design Number

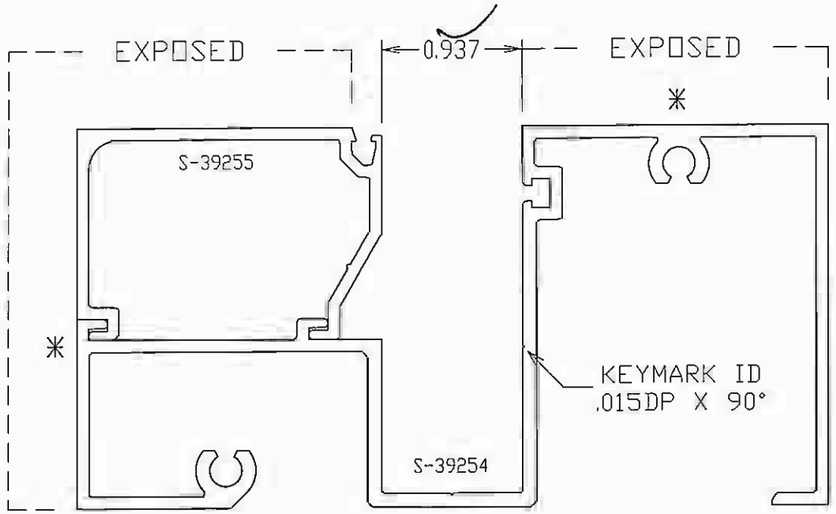

ACTUAL SIZE ASSEMBLY

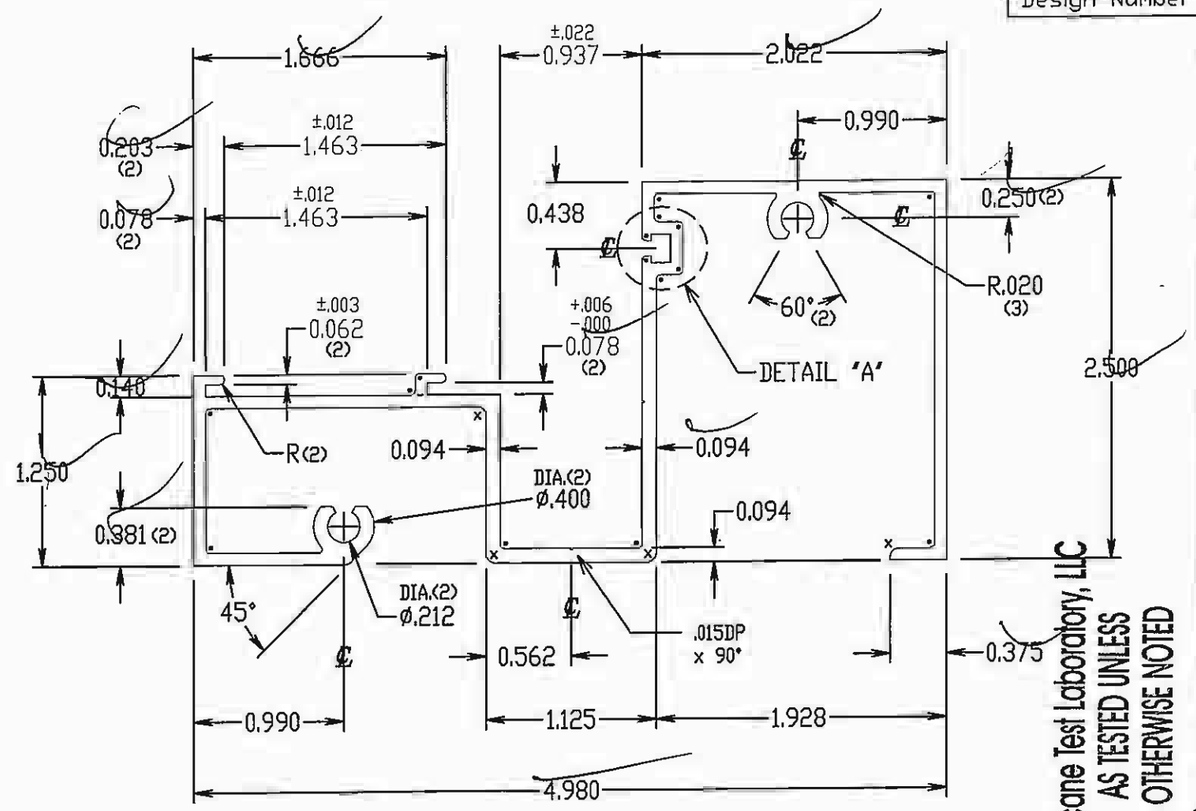

S-39254 MATES WITH:
S-39255 FL503

DETAIL "A"
SCALE 4:1

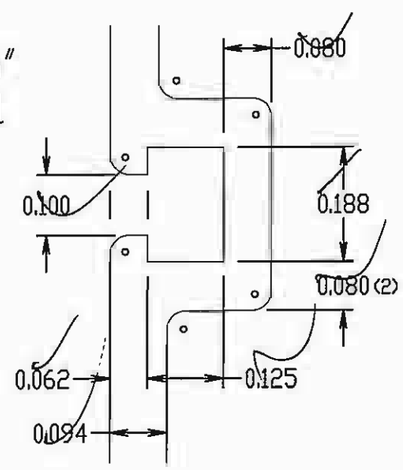

(•) DENOTES R .031 (15)
(×) DENOTES R .062 (4)

Hurricane Test Laboratory, LLC
AS TESTED UNLESS OTHERWISE NOTED
Date 5-15-07
Job# 0402-1105-00

KEYMARK CORPORATION
FONDA, NEW YORK
FAX ENG.(518)853-3435 SALES(518)853-3130
TEL. (518) 853-3421 E-MAIL engny@keymarkcorp.com

Unspecified Wall Thickness: .080
.010 Break Ext. Corners Radius or as Noted

Sym.	Revisions	Date
	PRINT CORRECTION	

Customer: CORAL ARCH. PRODUCTS			Customer's Part Number: FL502
Job Name: HURRICANE IMPACT			
Part Title: HEAD/SILL			Scale: 1:1
Alloy: 6063	Est. Area: 1.314 In²	Finish Perimeter: 3.500 In	Date: 01-06-06
Temper: T-6	Est. Wt./Ft.: 1.577 Lbs	Est. Perimeter: 30.485 In	Drawn: JR
Cavity Size	Circle Size: 5.6 In	Exterior Perimeter: 30.485 In	Checked

Estimated For Reference Only	I_x =	I_y =	Alodine ☐	Type: 00				
	S_x =	S_y =	Crimp	Factor 19	Mill ☐	Ano. ☐	Drnr. ☐	Drcn. ■

Solid ■ Semi-hollow ☐ Class Hollow ☐ Class

*	STRUCTURAL STREAKING IS EXPECTED

UNIFORM PAINT COVERAGE NOT EXPECTED IN THIS AREA

STANDARD COMMERCIAL TOLERANCES FOR EXTRUDED PRODUCTS APPLY UNLESS SPECIFIED OTHERWISE

S-39255
Die Number

Design Number

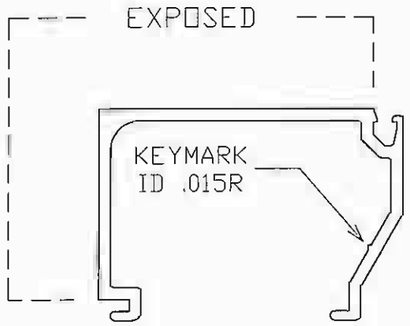

ACTUAL SIZE

S-39255 MATES WITH:
S-39254 FL502
H-08919 FL506

FOR ASSEMBLY
REFER TO S-39254

FOR ASSEMBLY
REFER TO H-08919

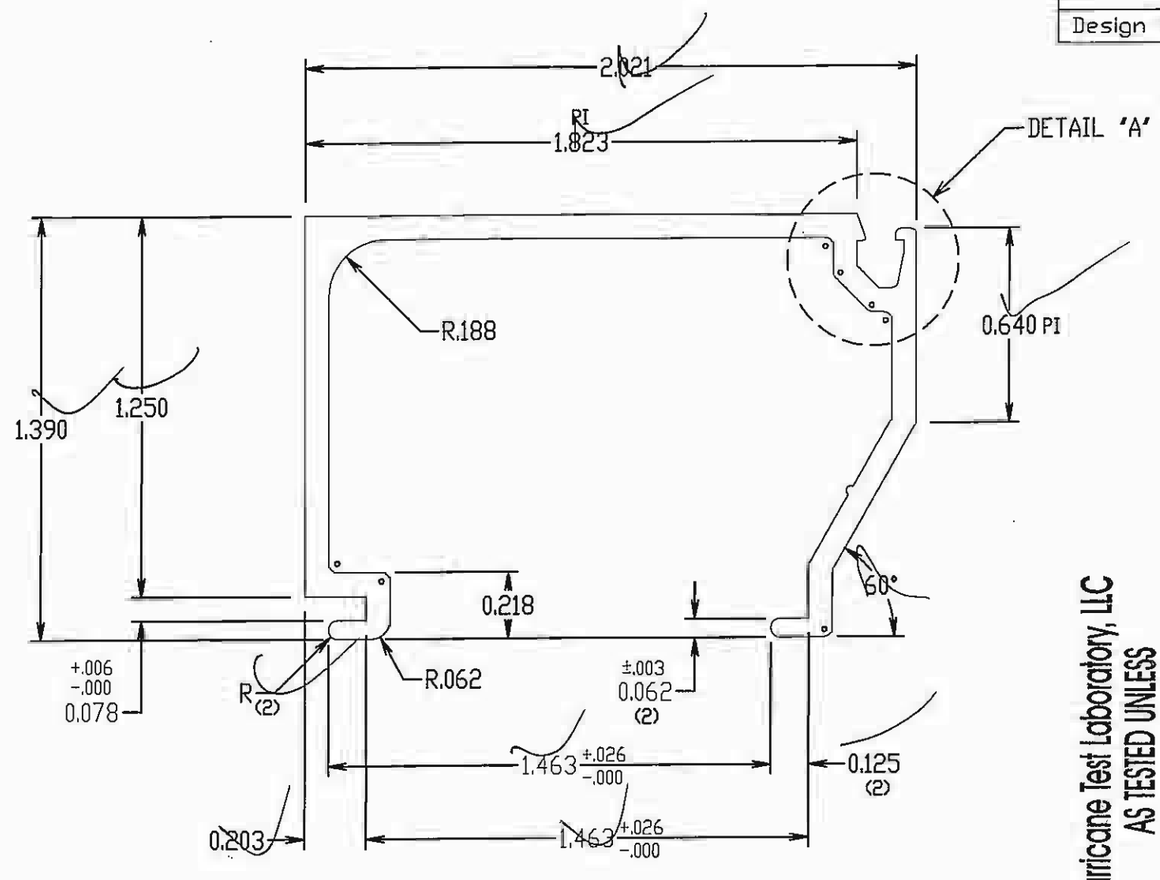

(∘) DENOTES R .031 (7)

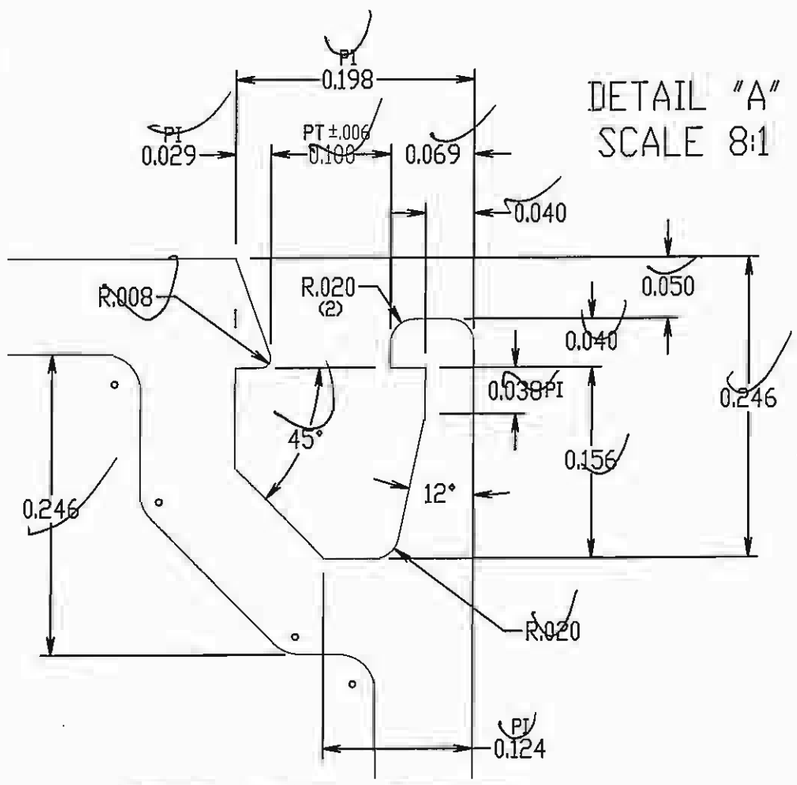

DETAIL "A"
SCALE 8:1

Hurricane Test Laboratory, LLC
AS TESTED UNLESS OTHERWISE NOTED
Date 5-8-07
Job# 0402-1105-010

HTL

KEYMARK CORPORATION
FONDA, NEW YORK

FAX ENG.(518)853-3435 SALES(518)853-3130
TEL. (518) 853-3421 E-MAIL engny@keymarkcorp.com

Unspecified Wall Thickness: .078 .010 Break Ext. Corners Radius or as Noted

Customer	Customer's Part Number
CORAL ARCH. PRODUCTS	FL503
Job Name: HURRICANE IMPACT	
Part Title: GLASS STOP	Scale: 2:1

Alloy	Est. Area	Finish Perimeter	Date
6063	0.414 In²	3.500 In	01-07-06
Temper	Est. Wt./Ft.	Est. Perimeter	Drawn
T-6	0.497 Lbs	10.608 In	JR
Cavity Size	Circle Size	Exterior Perimeter	Checked
	2.4 In	10.608 In	

Sym.	Revisions	Date
	PRINT CORRECTION	

Estimated For Reference Only												
	I_x =	I_y =	Alodine ☐	Type: 00								
	S_x =	S_y =	Crimp	Factor 21	Mill ☐	Ano. ☐	Drnr. ☐	Drcn. ■	Solid ■	Semi-hollow ☐ Class	Hollow ☐ Class	

Customer signature on this print indacates approval of design and dimensions as shown, and customer agrees to accept all legal responsibilities for patent and or trade mark infrignement related to this shape and hold (save) Keymark harmless from any claims, suits, actions or demands arising there from. This drawing is the property of Keymark Corporation and may not be redistributed without written consent

Customer signature on this print indacates approval of design and dimensions as shown, and customer agrees to accept all legal responsibilities for patent and or trade mark infringement related to this shape and hold (save) Keymark harmless from any claims, suits, actions or demands arising there from.
This drawing is the property of Keymark Corporation and may not be redistributed without written consent

*	STRUCTURAL STREAKING IS EXPECTED

UNIFORM PAINT COVERAGE NOT EXPECTED IN THIS AREA

STANDARD COMMERCIAL TOLERANCES FOR EXTRUDED PRODUCTS APPLY UNLESS SPECIFIED OTHERWISE

S-39256
Die Number

Design Number

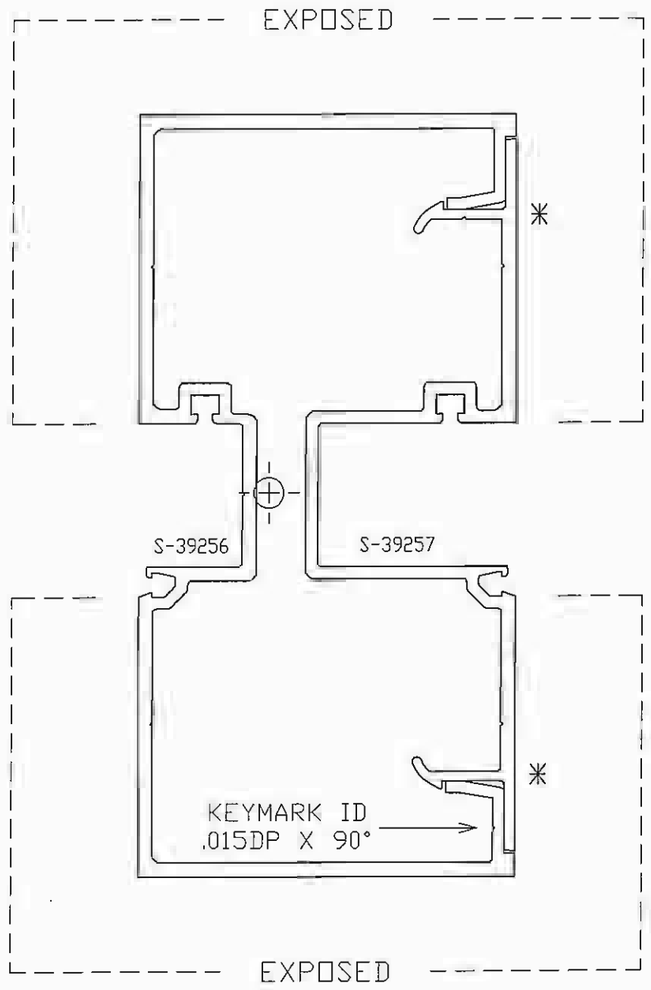

ACTUAL SIZE ASSEMBLY

S-39256 MATES WITH:
S-39257 FL505

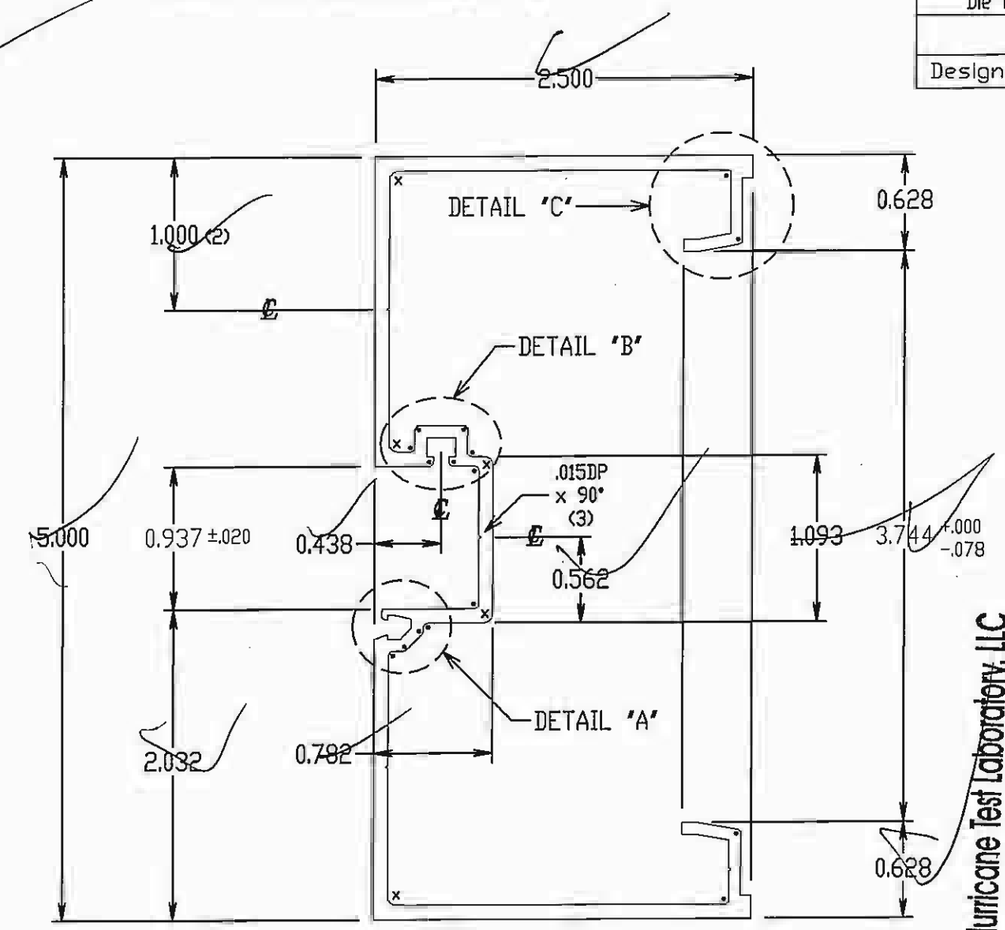

(•) DENOTES R .031 (16)
(×) DENOTES R .062 (5)

Hurricane Test Laboratory, LLC
AS TESTED UNLESS OTHERWISE NOTED
Date 5-15-07
Job# 0422-1102-00

KEYMARK CORPORATION
FONDA, NEW YORK
FAX ENG.(518)853-3435 SALES(518)853-3130
TEL. (518) 853-3421 E-MAIL engny@keymarkcorp.com

Sym.	Revisions	Date
3	PRINT CORRECTION	03-29-06

Unspecified Wall Thickness: .094 — .010 Break Ext. Corners Radius or as Noted

Customer: CORAL ARCH. PRODUCTS			Customer's Part Number: FL504
Job Name: HURRICANE IMPACT			
Part Title: MULLION / DOOR JAMB			Scale: 1:1
Alloy: 6063	Est. Area: 1.211 In^2	Finish Perimeter: 9.165 In	Date: 01-07-06
Temper: T-6	Est. Wt./Ft.: 1.453 Lbs	Est. Perimeter: 26.738 In	Drawn: JR
Cavity Size	Circle Size: 5.6 In	Exterior Perimeter: 26.738 In	Checked: S.J.S.

Estimated For Reference Only	I_x = 4.346	I_y = 0.877	Alodine ☐	Type: 00				
	S_x = 1.728	S_y = 1.015	Crimp	Factor 18	Mill ☐	Ano. ☐	Drnr. ☐	Drcn. ■

Solid ■ Semi-hollow ☐ Class Hollow ☐ Class

STANDARD COMMERCIAL TOLERANCES FOR EXTRUDED PRODUCTS APPLY UNLESS SPECIFIED OTHERWISE

S-39256-D
Die Number

DETAIL "A"
SCALE 8:1

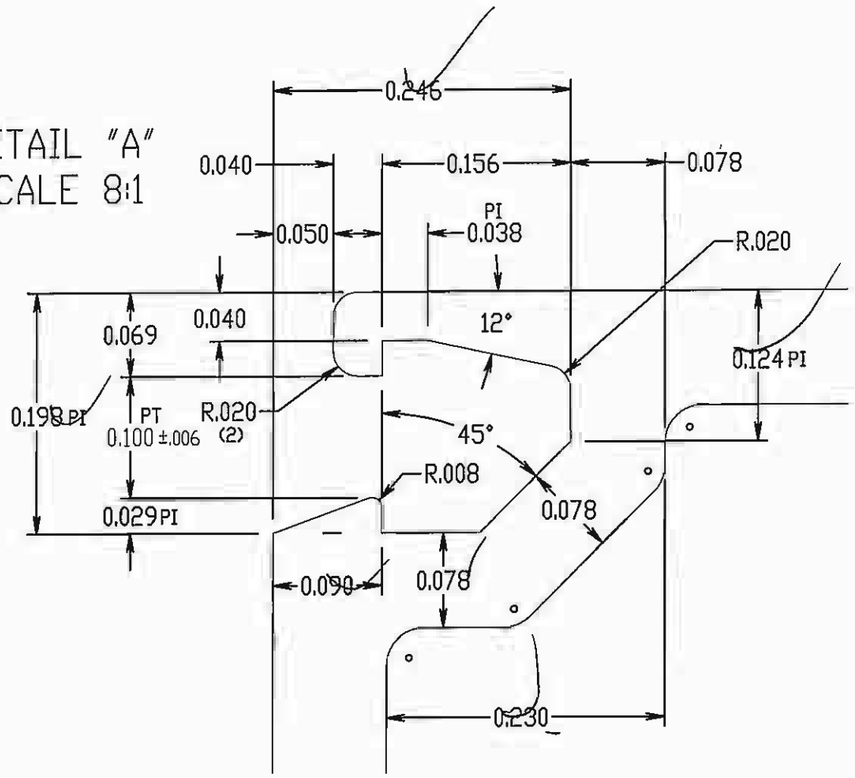

DETAIL "B"
SCALE 4:1

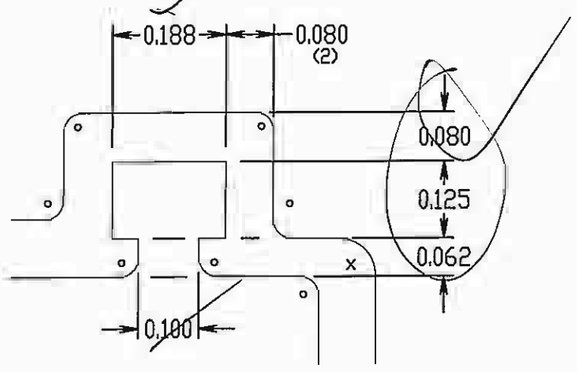

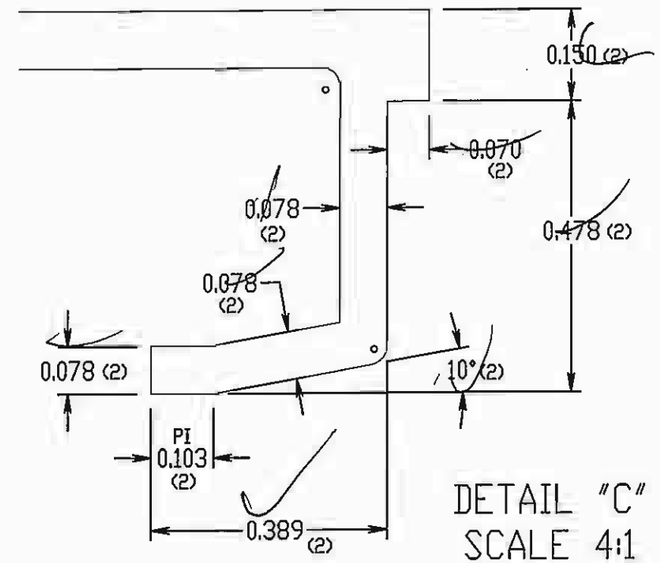

DETAIL "C"
SCALE 4:1

Hurricane Test Laboratory, LLC
AS TESTED UNLESS OTHERWISE NOTED
Date 5-15-07
Job# 0402-1105-06

Customer signature on this print indicates approval of design and dimensions as shown, and customer agrees to accept all legal responsibilities for patent and or trade mark infrigement related to this shape and hold (save) Keymark harmless from any claims, suits, actions or demands arising there from.
This drawing is the property of Keymark Corporation and may not be redistributed without written consent

KEYMARK CORPORATION
FONDA, NEW YORK
FAX ENG.(518)853-3435 SALES(518)853-3130
TEL. (518) 853-3421 E-MAIL keyeng@superior.net

Unspecified Wall Thickness: .094

Break Ext. Corners .015 Radius or as Noted

Sym.	Revisions	Date
	PRINT CORRECTION	

Customer: CORAL ARCH. PRODUCTS			Customer's Part Number: FL504
Job Name: HURRICANE IMPACT			
Part Title: MULLION / DOOR JAMB			Job Number
Scale	Date: 01-07-06	Drawn: JR	Checked

Customer signature on this print indicates approval of design and dimensions as shown, and customer agrees to accept all legal responsibilities for patent and or trade mark infrigement related to this shape and hold (save) Keymark harmless from any claims, suits, actions or demands arising there from.
This drawing is the property of Keymark Corporation and may not be redistributed without written consent

✳ STRUCTURAL STREAKING IS EXPECTED

UNIFORM PAINT COVERAGE NOT EXPECTED IN THIS AREA

STANDARD COMMERCIAL TOLERANCES FOR EXTRUDED PRODUCTS APPLY UNLESS SPECIFIED OTHERWISE

S-39257
Die Number
Design Number

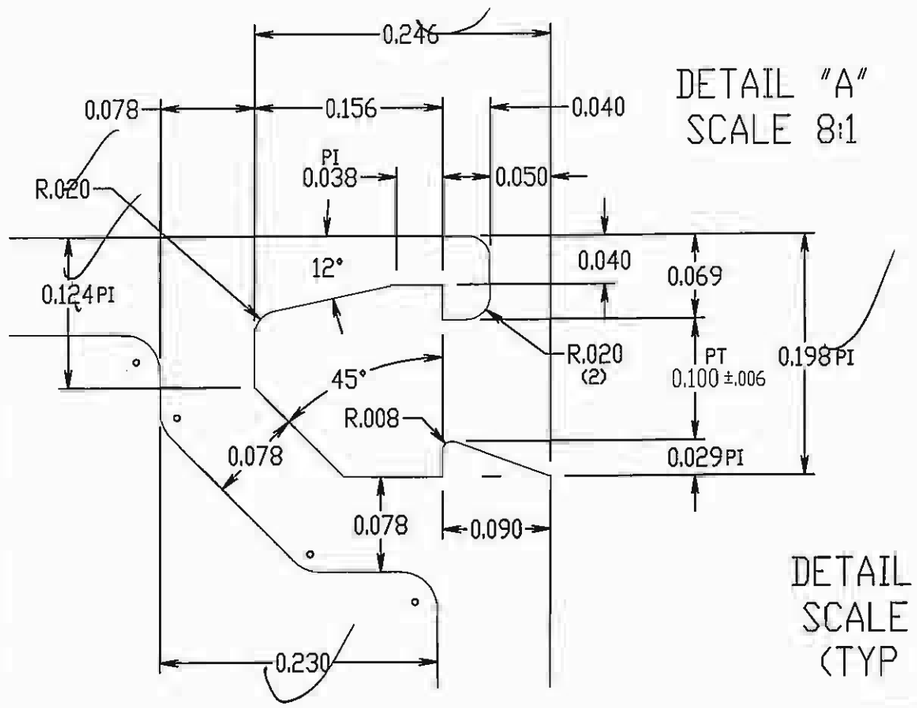

DETAIL "A"
SCALE 8:1

S-39257 MATES WITH:
S-39256 FL504
S-39258 FL516

FOR ASSEMBLY REFER TO S-39256

FOR ASSEMBLY REFER TO S-39258

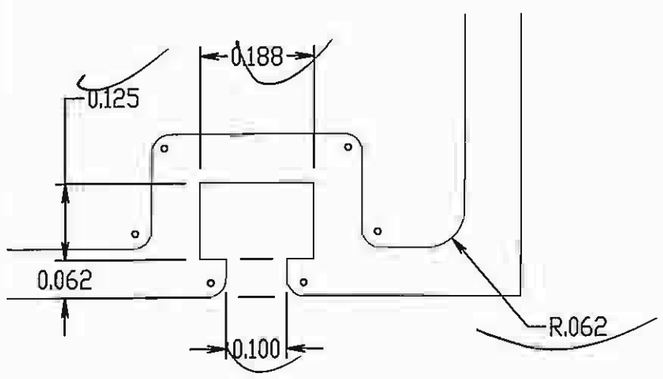

DETAIL "B"
SCALE 4:1

DETAIL "C"
SCALE 4:1
(TYP 2)

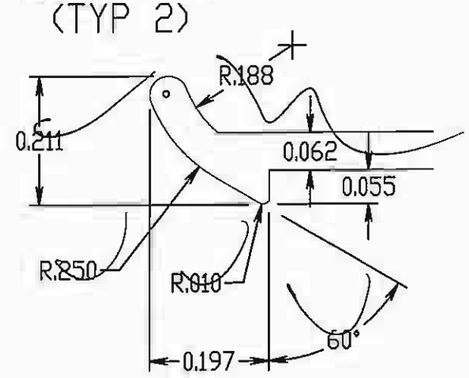

ACTUAL SIZE

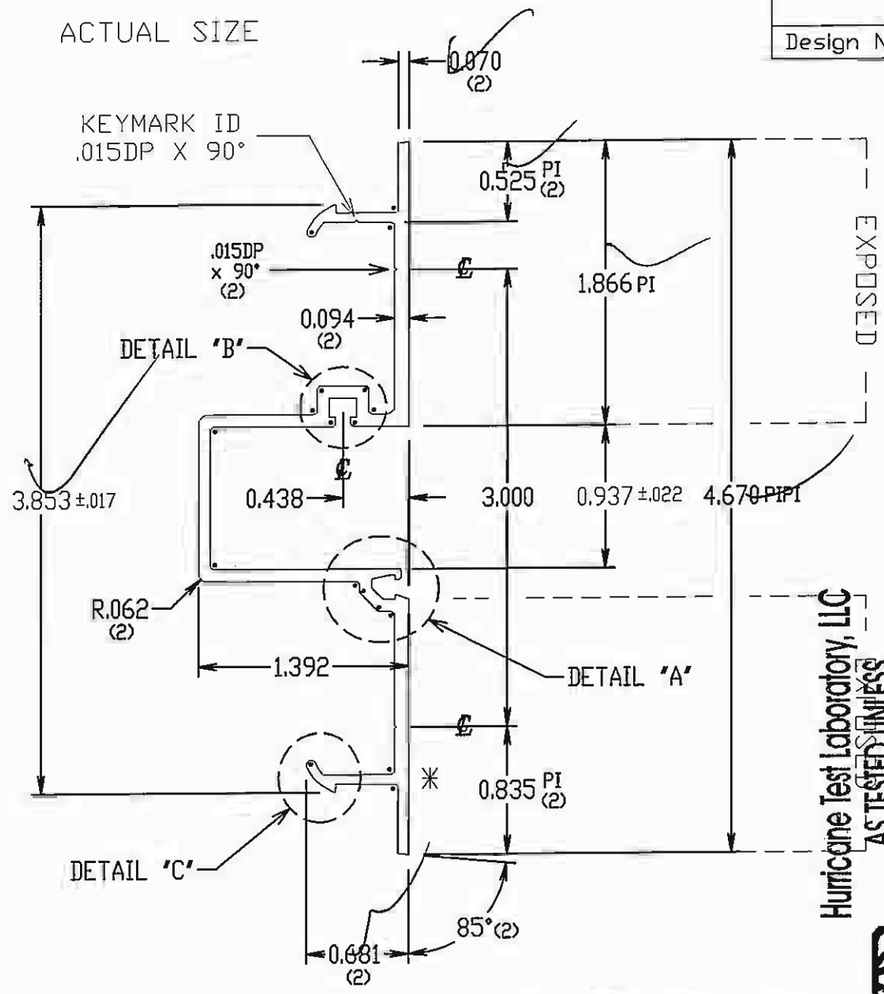

(•) DENOTES R .031 (18)

Hurricane Test Laboratory, LLC
AS TESTED UNLESS OTHERWISE NOTED
Date 5-15-07
Job# 2402-1105-06

KEYMARK CORPORATION
FONDA, NEW YORK
FAX ENG.(518)853-3435 SALES(518)853-3130
TEL. (518) 853-3421 E-MAIL engny@keymarkcorp.com

Sym.	Revisions	Date
1	PRINT CORRECTION	01-12-06

Unspecified Wall Thickness: .080 | .010 Break Ext. Corners Radius or as Noted

Customer: CORAL ARCH. PRODUCTS			Customer's Part Number: FL505
Job Name: HURRICANE IMPACT			
Part Title: MULLION FILLER			Scale: 1:1
Alloy: 6063	Est. Area: 0.734 In²	Finish Perimeter: 3.535 In	Date: 01-07-06
Temper: T-6	Est. Wt./Ft.: 0.881 Lbs	Est. Perimeter: 18.369 In	Drawn: JR
Cavity Size	Circle Size: 4.7 In	Exterior Perimeter: 18.369 In	Checked

Estimated For Reference Only	I_x =	I_y =	Alodine ☐	Type: 00						
	S_x =	S_y =	Crimp	Factor 21	Mill ☐	Ano. ☐	Drnr. ☐	Drcn. ■	Solid ■	Semi-hollow ☐ Class	Hollow ☐ Class

Customer signature on this print indicates approval of design and dimensions as shown, and customer agrees to accept all legal responsibilities for patent and or trade mark infringement related to this shape and hold (save) Keymark harmless from any claims, suits, actions or demands arising there from. This drawing is the property of Keymark Corporation and may not be redistributed without written consent

*	STRUCTURAL STREAKING IS EXPECTED

UNIFORM PAINT COVERAGE NOT EXPECTED IN THIS AREA

STANDARD COMMERCIAL TOLERANCES FOR EXTRUDED PRODUCTS APPLY UNLESS SPECIFIED OTHERWISE

H-08919
Die Number
Design Number

H-08919 MATES WITH:
S-39255 FL503

FOR ASSEMBLY REFER TO S-39254

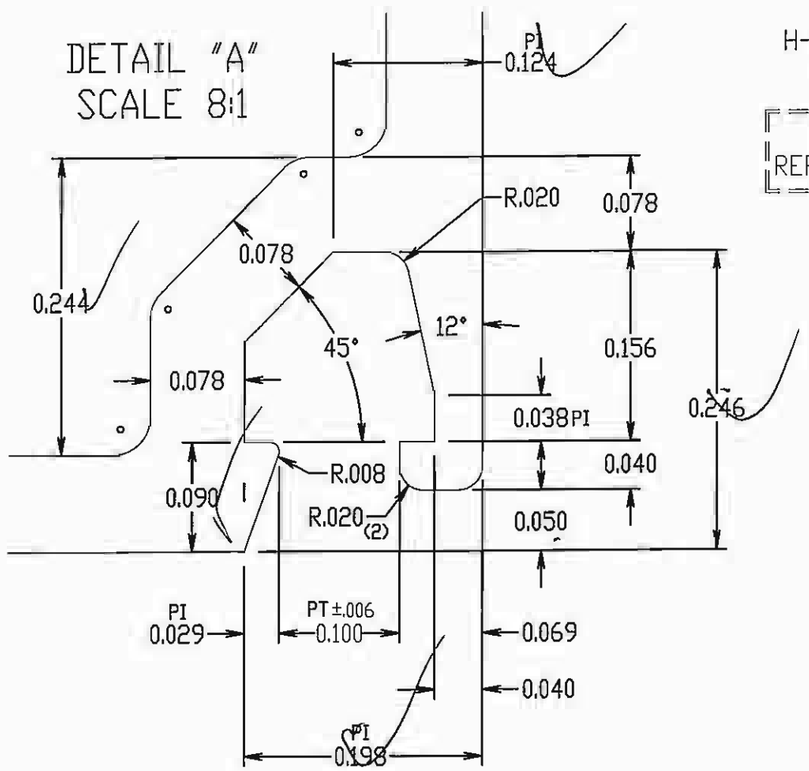

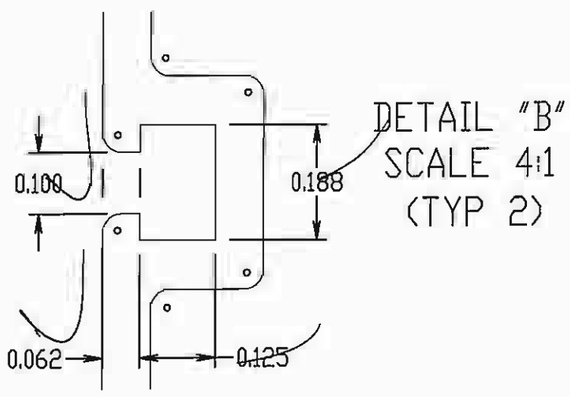

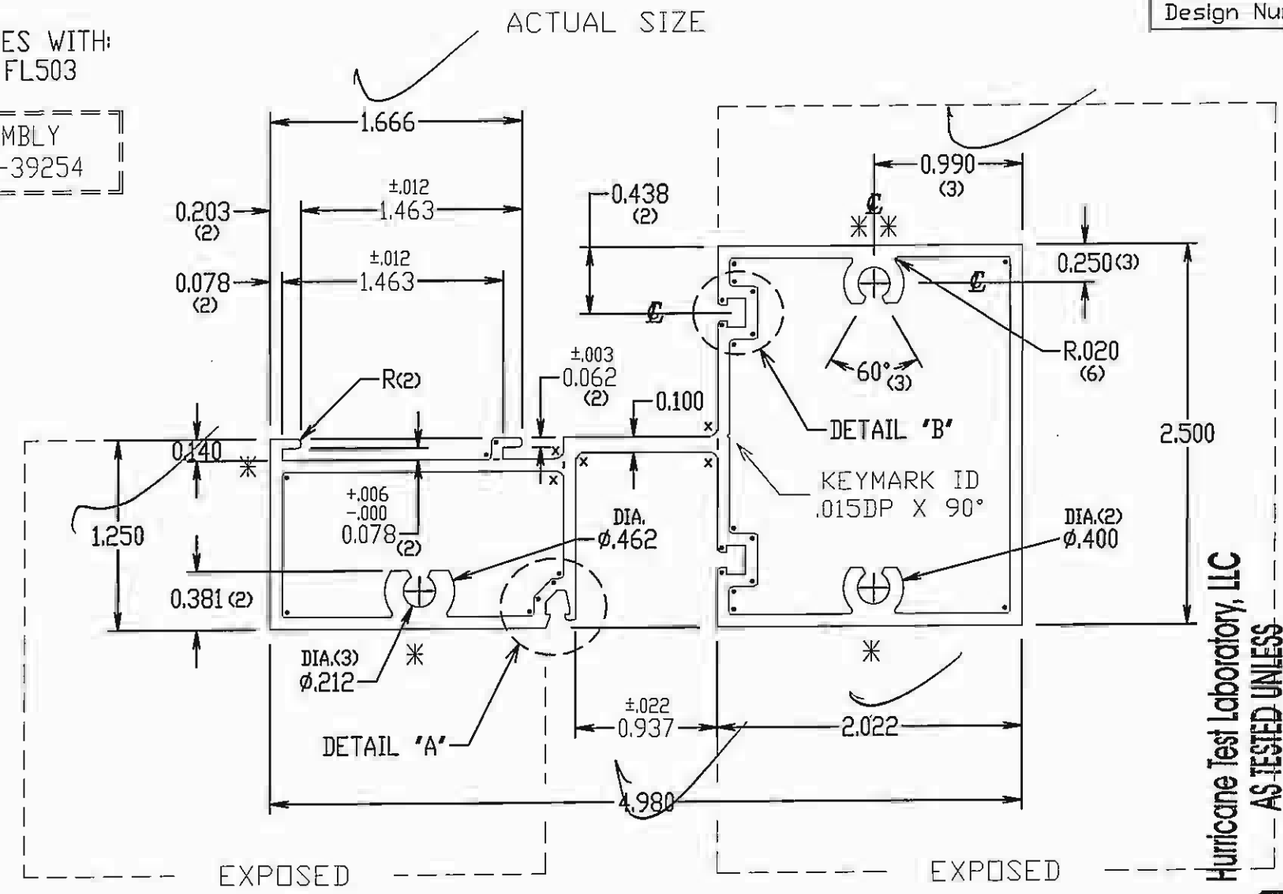

(•) DENOTES R .031 (24)
(×) DENOTES R .062 (5)

KEYMARK CORPORATION
FONDA, NEW YORK
FAX ENG.(518)853-3435 SALES(518)853-3130
TEL. (518) 853-3421 E-MAIL engny@keymarkcorp.com

Sym.	Revisions	Date
1	PRINT CORRECTION	01-12-06

Hurricane Test Laboratory, LLC
AS TESTED UNLESS OTHERWISE NOTED

Date 5-15-07
Job# [illegible]

Estimated For Reference Only	I_x =	I_y =	Alodine ☐	Type: 00			
	S_x =	S_y =	Crimp	Factor 19	Mill ☐	Ano. ☐	Drnr. ☐ Drcn. ■

Solid ☐ Semi-hollow ☐ Class Hollow ■ Class 3

Unspecified Wall Thickness: .080		.010	Break Ext. Corners Radius or as Noted
Customer CORAL ARCH. PRODUCTS			Customer's Part Number N506
Job Name HURRICANE IMPACT			
Part Title INTERMEDIATE HORIZONTAL			Scale 1:1
Alloy 6063	Est. Area 1.624 In^2	Finish Perimeter 9.617 In	Date 01-07-06
Temper T-6	Est. Wt./Ft. 1.949 Lbs	Est. Perimeter 37.489 In	Drawn JR
Cavity Size	Circle Size 5.6 In	Exterior Perimeter 19.573 In	Checked

Customer signature on this print indacates approval of design and dimensions as shown, and customer agrees to accept all legal responsibilities for patent and or trade mark infrignement related to this shape and hold (save) Keymark harmless from any claims, suits, actions or demands arising there from.
This drawing is the property of Keymark Corporation and may not be redistributed without written consent

✳ STRUCTURAL STREAKING IS EXPECTED

UNIFORM PAINT COVERAGE NOT EXPECTED IN THIS AREA

STANDARD COMMERCIAL TOLERANCES FOR EXTRUDED PRODUCTS APPLY UNLESS SPECIFIED OTHERWISE

S-39258
Die Number

Design Number

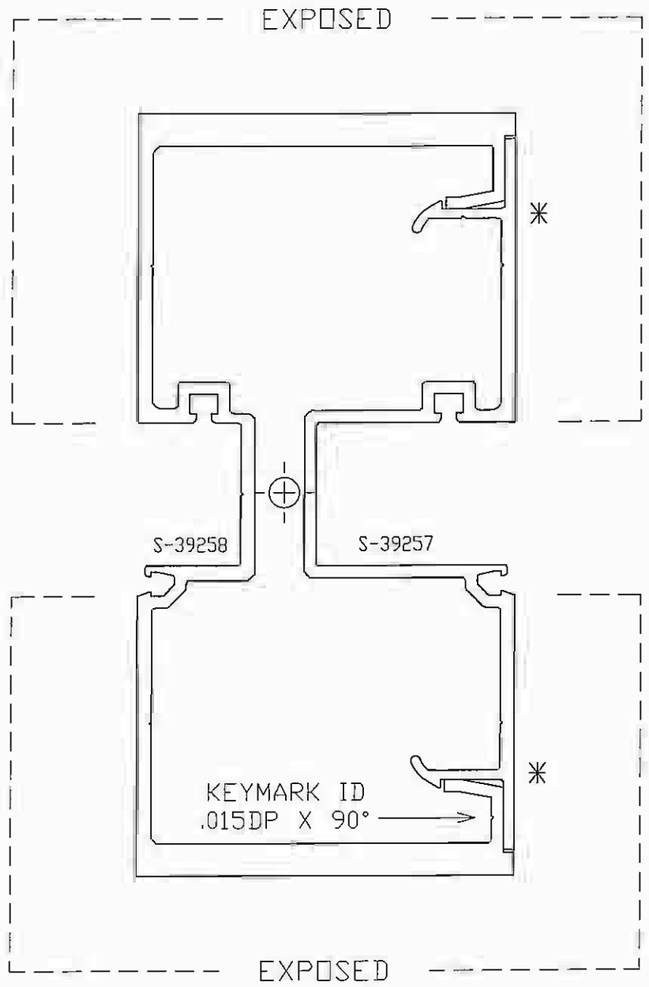

ACTUAL SIZE ASSEMBLY

S-39258 MATES WITH
S-39257 FL505

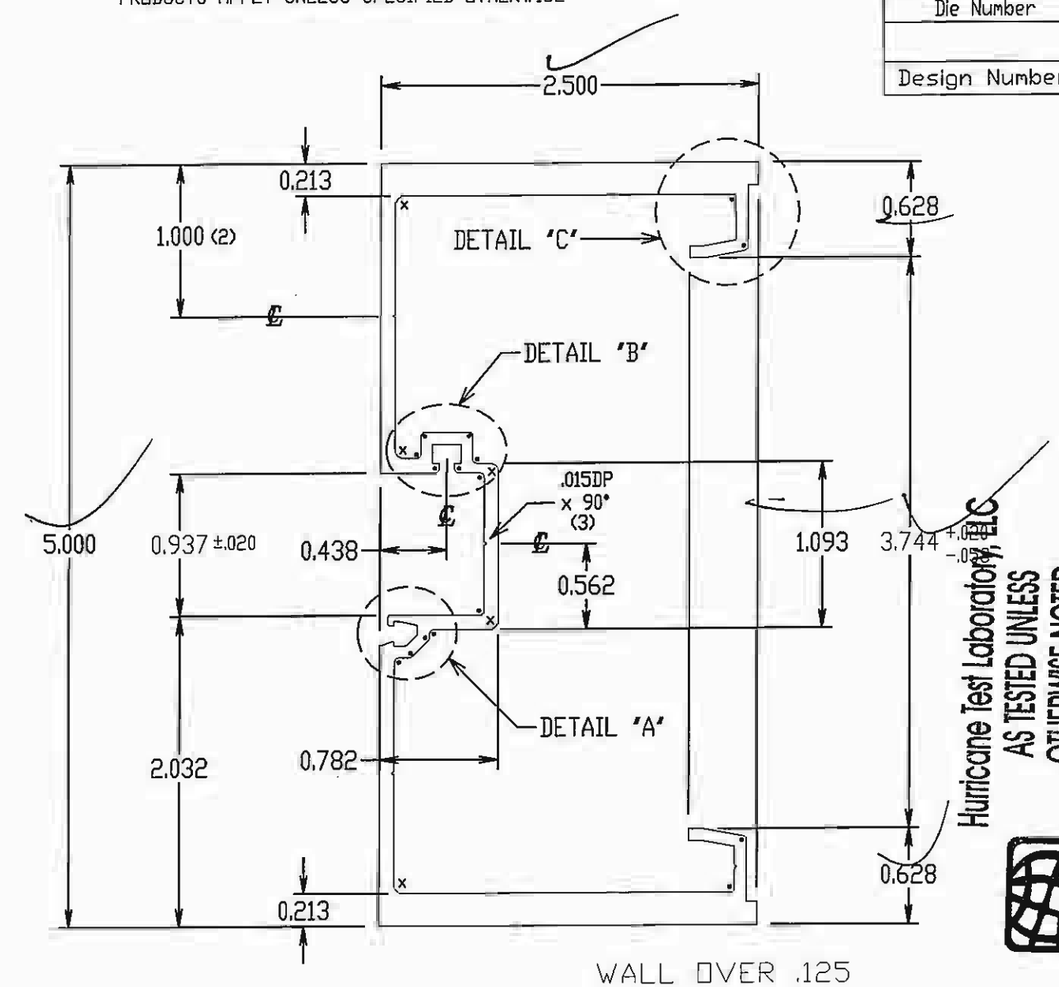

(•) DENOTES R .031 (16)
(×) DENOTES R .062 (5)

WALL OVER .125
|||✳ 7 MINIMUM ON WEBSTER ✳|||
ON .125 WALLS OR LOWER
|||✳ 12 MINIMUM ON WEBSTER ✳|||

Unspecified Wall Thickness: .094 .010 Break Ext. Corners Radius or as Noted

Hurricane Test Laboratory, LLC
AS TESTED UNLESS OTHERWISE NOTED
Date 5-15-07
Inbd #

KEYMARK CORPORATION
FONDA, NEW YORK
FAX ENG.(518)853-3435 SALES(518)853-3130
TEL. (518) 853-3421 E-MAIL engny@keymarkcorp.com

Sym.	Revisions	Date
2	PRINT CORRECTION	01-29-06

Customer: CORAL ARCH. PRODUCTS			Customer's Part Number: FL516
Job Name: HURRICANE IMPACT			
Part Title: HEAVY MULLION			Scale: 1:1
Alloy: 6063	Est. Area: 1.748 In²	Finish Perimeter: 9.165 In	Date: 01-09-06
Temper: T-6	Est. Wt./Ft.: 2.098 Lbs	Est. Perimeter: 26.262 In	Drawn: JR
Cavity Size	Circle Size: 5.6 In	Exterior Perimeter: 26.262 In	Checked: S.J.S.

Estimated For Reference Only	I_x = 7.304	I_y = 1.153	Alodine ☐	Type: 00								
	S_x = 2.910	S_y = 1.183	Crimp	Factor 13	Mill ☐	Ano. ☐	Drnr. ☐	Drcn. ■	Pc ☐	Solid ■	Semi-hollow ☐ Class	Hollow ☐ Class

Customer signature on this print indacates approval of design and dimensions as shown, and customer agrees to accept all legal responsibilities for patent and or trade mark infrignement related to this shape and hold (save) Keymark harmless from any claims, suits, actions or demands arising there from.
This drawing is the property of Keymark Corporation and may not be redistributed without written consent

STANDARD COMMERCIAL TOLERANCES FOR EXTRUDED PRODUCTS APPLY UNLESS SPECIFIED OTHERWISE

S-39258-D
Die Number

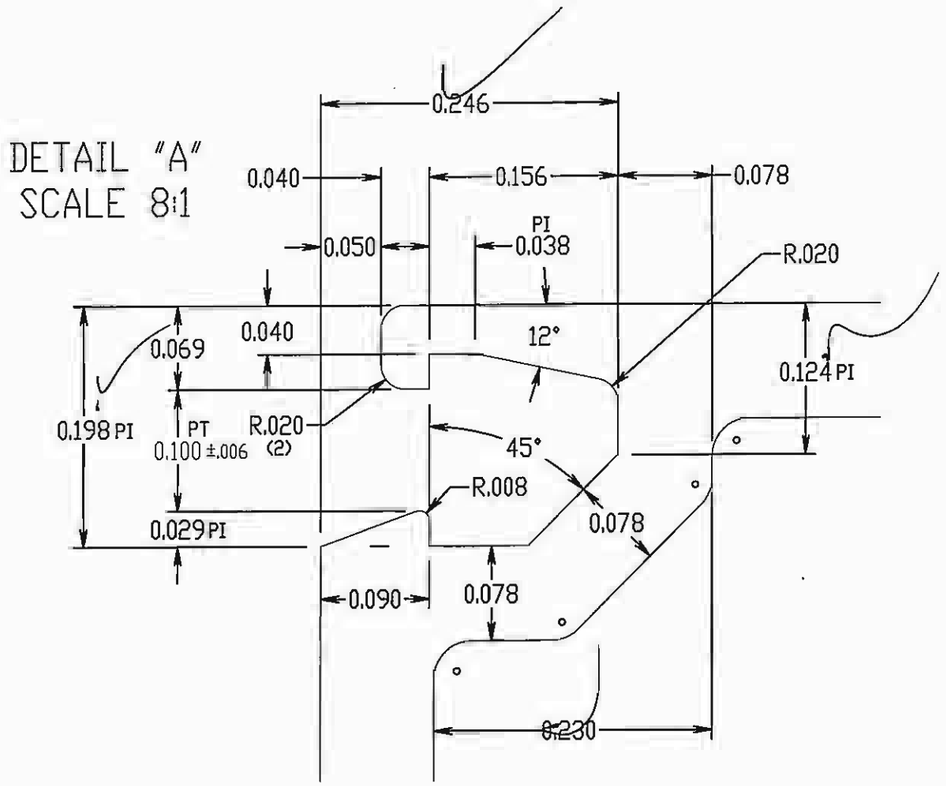

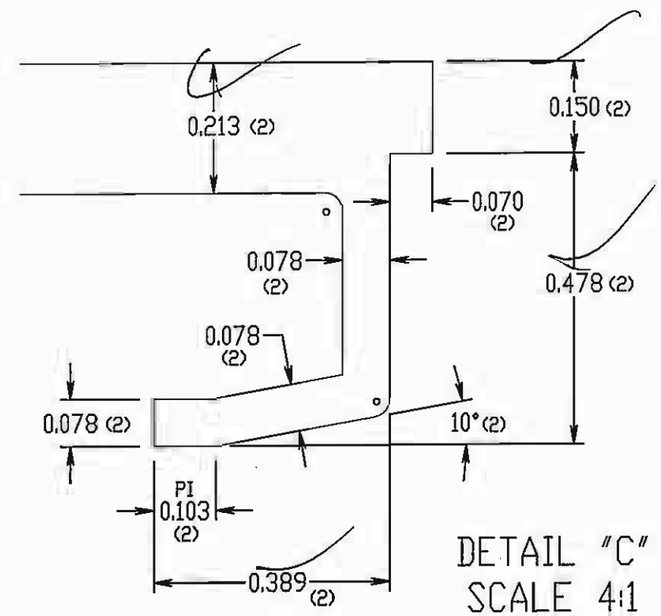

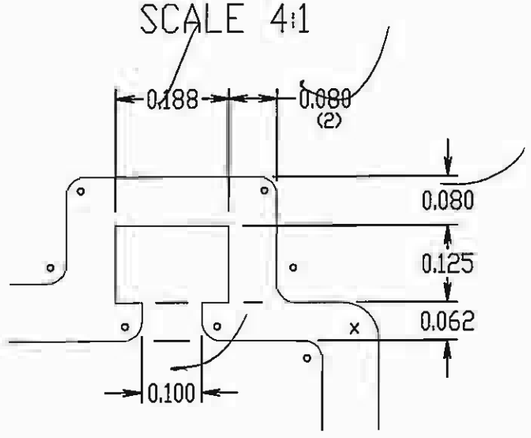

Hurricane Test Laboratory, LLC
AS TESTED UNLESS OTHERWISE NOTED
Date 6-15-07
Job# 06z-1105-06

KEYMARK CORPORATION
FONDA, NEW YORK
FAX ENG.(518)853-3435 SALES(518)853-3130
TEL. (518) 853-3421 E-MAIL keyeng@superior.net

Unspecified Wall Thickness: .094

Break Ext. Corners .015 Radius or as Noted

Sym.	Revisions	Date
	PRINT CORRECTION	

Customer: CORAL ARCH. PRODUCTS			Customer's Part Number: FL516
Job Name: HURRICANE IMPACT			
Part Title: HEAVY MULLION			Job Number
Scale	Date: 01-09-06	Drawn: JR	Checked

*	STRUCTURAL STREAKING IS EXPECTED

UNIFORM PAINT COVERAGE NOT EXPECTED IN THIS AREA

STANDARD COMMERCIAL TOLERANCES FOR EXTRUDED PRODUCTS APPLY UNLESS SPECIFIED OTHERWISE

S-39260
Die Number

Design Number

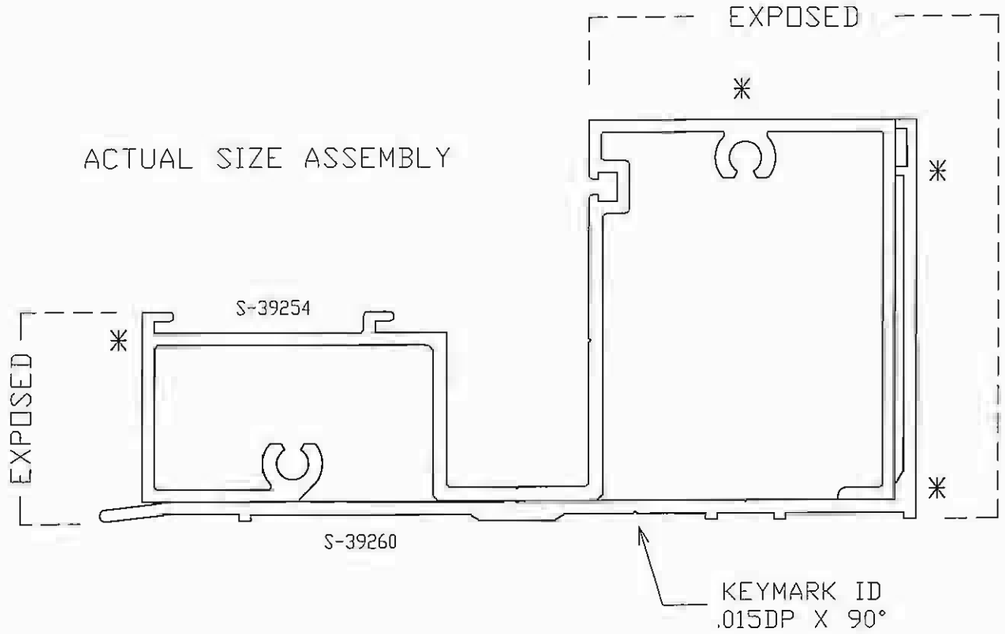

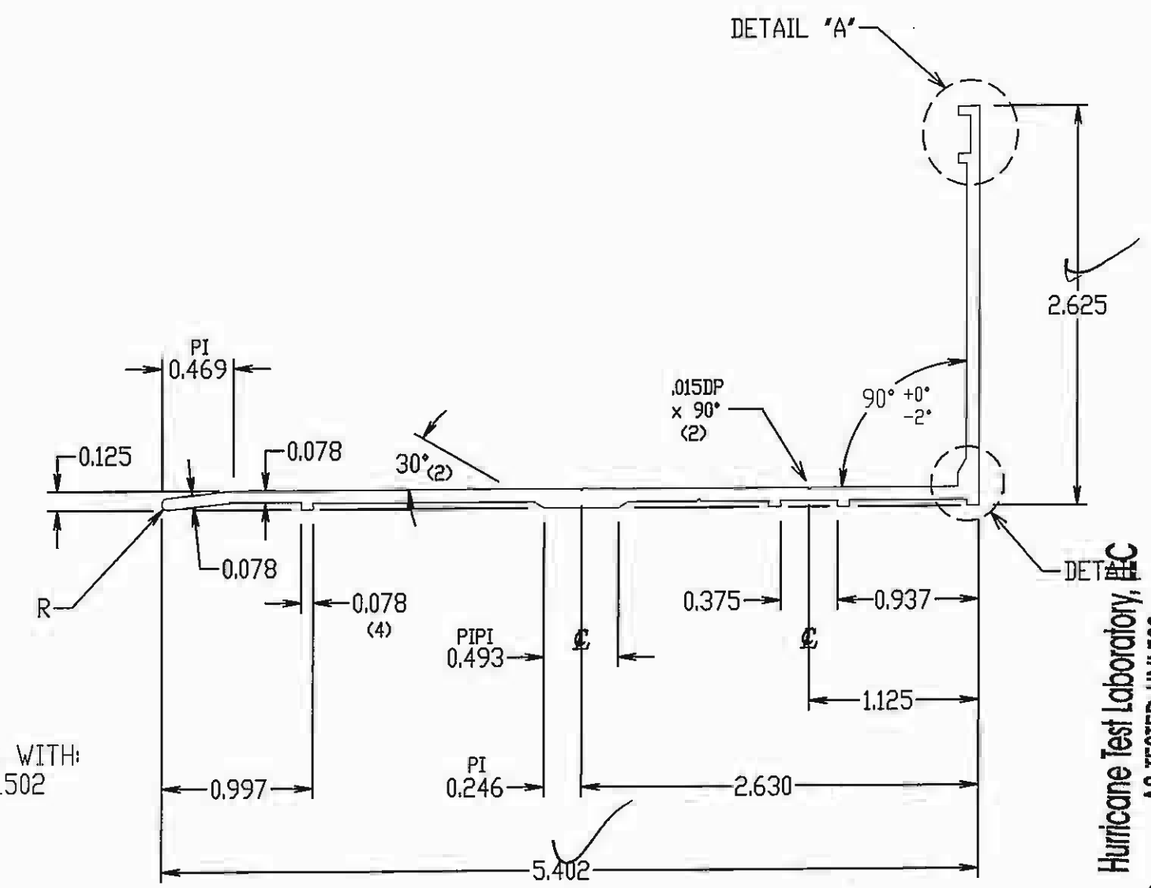

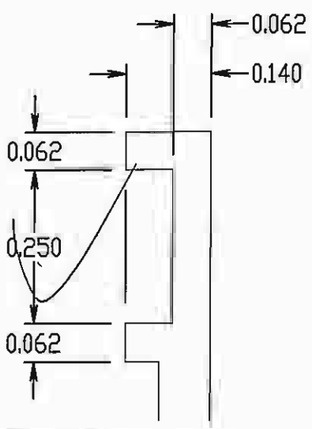

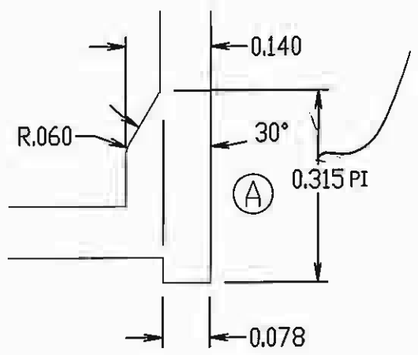

S-39260 MATES WITH:
S-39254 FL502

Hurricane Test Laboratory, INC.
AS TESTED UNLESS OTHERWISE NOTED

Date 5-15-07
Job# [illegible]

Customer signature on this print indicates approval of design and dimensions as shown, and customer agrees to accept all legal responsibilities for patent and or trade mark infringement related to this shape and hold (save) Keymark harmless from any claims, suits, actions or demands arising there from. This drawing is the property of Keymark Corporation and may not be redistributed without written consent

KEYMARK CORPORATION
FONDA, NEW YORK
FAX ENG.(518)853-3435 SALES(518)853-3130
TEL. (518) 853-3421 E-MAIL engny@keymarkcorp.com

Sym.	Revisions	Date
A	THICKNESS ADDED	11-30-06

Unspecified Wall Thickness: .084

.010 Break Ext. Corners Radius or as Noted

Customer: CORAL ARCH. PRODUCTS			Customer's Part Number: FL519
Job Name: HURRICANE IMPACT			
Part Title: SUB-SILL FLASHING			Scale: 1:1
Alloy: 6063	Est. Area: 0.702 In²	Finish Perimeter: 3.500 In	Date: 01-09-06
Temper: T-6	Est. Wt./Ft.: 0.842 Lbs	Est. Perimeter: 16.557 In	Drawn: JR
Cavity Size	Circle Size: 5.9 In	Exterior Perimeter: 16.557 In	Checked: S.J.S. 03

Estimated For Reference Only	I_x =	I_y =	Alodine ☐	Type: 00								
	S_x =	S_y =	Crimp	Factor 20	Mill ☐	Ano. ☐	Drnr. ☐	Drcn. ■	Pc ☐	Solid ■	Semi-hollow ☐ Class	Hollow ☐ Class

SPECIFICATION SHEETS

SM5601
SM5603

ISOCRYL® TAPE SEALANTS

S-M®

TECH DATA

PRODUCT NAME:
SM5601 (Black) Isocryl® Tape Sealant.
SM5603 (Gray) Isocryl® Tape Sealant.

MANUFACTURER:
Schnee-Morehead, Inc. Please refer to the reverse side of this sheet for the listing of the manufacturing facility.

PRODUCT DESCRIPTION:
Isocryl® Tape Sealants are compounded from polyisobutylene and isoprene polymers. Tests indicate that they exhibit aggressive initial adhesion, are easily compressed and will easily accommodate dimensional changes in a detail where movement is anticipated. Physical characteristics are maintained after exposure to ultraviolet radiation and temperature extremes. Atmospheric contamination has little to no effect on the function of these sealant tapes.

The suitability of this product, for each intended use, must be determined by the purchaser or user prior to acceptance.

SPECIFICATION COMPLIANCE:

AAMA Specification:
AAMA 807.3

Reference Standards:
ANSI/AAMA 101-85
AAMA/NWWDA101/1.5.2

BASIC USES:
SM5601 and SM5603 are used in fabrication details found in many industries. Outdoor lighting fixtures, curtain wall fixed joints, skylite details, panel dampening applications and transportation industry vision lites are but a few of the diverse areas where these sealant tapes can be used.

These tape sealants may be factory or field applied. No primers are required to obtain adhesion. Clean substrates are required for optimum adhesion.

TYPICAL PROPERTIES

Characteristic	*Result*	*Test Method*
Color:	SM5601: Black SM5603: Gray	
Consistency:	Soft tacky rubber	
Cone Penetration:	101-115mm/5 seconds 300 gram load	ASTM D 217
Percent Solids:	100%	
Elongation:	500% minimum	ASTM D 1191
Service Temperature Range:	-30°F (-34°C) to 180°F (82°C)	
Storage Life:	18 months from date of manufacture when stored in original closed container at or below 100°F (38°C)	
Crazing to Acrylic Plastic:	None	MIL-S-11030 C Para. 4.5.7
Peel Strength:	7–10 P.I.W. 95% cohesive separation	AAMA 800.92
Wt/Gal.:	9.58 lb/gal. (1.15 Kg/L)	

**ALL TEST METHODS ARE THE MOST RECENTLY PUBLISHED VERSIONS.*

LIMITATIONS:
Not recommended for:
a) Joints that will be subjected to continuous water submersion.
b) Joints that are not mechanically fixed.

APPLICATION LIMITATIONS:
a) Do not apply tape sealant to wet or frost bearing surfaces.

TECHNICAL DATA:
Tests indicate that Isocryl® Tape Sealants exhibit resistance to ultraviolet and infrared radiations, precipitation, atmospheric hydrocarbon contamination and extremes in temperature. Shelf life is eighteen (18) months when stored in a dry place where temperature does not exceed 100°F (38°C).

INSTALLATION:
Optimally, a clean dry uncontaminated surface is desired to obtain intimate adhesion, but realistically there are field situations that prevent complete control of surface conditions. Obviously, excessive oil, caked-on dirt, free-standing water and ice or snow must be removed before the tape sealant is applied.

Position tape sealant on required seal area with backing paper on top. Using a smooth even hand motion, press the tape to the surface to make intimate contact without distorting the tape sealant. Avoid lapping of tape by butt joining tapes at transition points. Remove backing paper prior to mating adjoining surface and fastening. **IF THIS TAPE SEALANT IS IN DIRECT CONTACT WITH ANY OTHER SEALANT OR ELASTOMER, A COMPATIBILITY TEST MUST BE CONDUCTED PRIOR TO USE.**

SM5601 and SM5603 Isocryl® Tapes are compatible with the following Schnee-Morehead products:

- Acryl-R® Sealant SM5522
- SM5430 Non-Drying Sealant
- Acryl-R® Narrow-Joint Sealant SM5504
- SM7100 and SM7108 Permathane® Polyurethane Sealants
- SM5731 and SM5732 Poly-Glaze™ Silicone Sealants

The suitability of this product, for each intended use, must be determined by the purchaser of user prior to acceptance. Typically, solvent base sealants will soften butyl tape sealants upon contact. This is a short term effect until the solvent has evaporated, and no long term effects on performance properties of the tape sealant are anticipated.

SPECIFICATION COMPLIANCE:
Isocryl® Tapes meet and exceed the test requirements of:

AAMA 807.3 (This specification supersedes obsolete NAAMM Std. SS-1b-68)

AVAILABILITY AND COST:
Isocryl® Tape Sealants are available in a variety of sizes. Please contact Schnee-Morehead for additional information. Names of distributors and agents are available through Schnee-Morehead.

MAINTENANCE:
No maintenance should be needed.

PRETEST FOR ADHESION:
Pretest for adhesion is intended to eliminate potential field problems by testing Isocryl® Tape Sealants with samples of the surface on which it will be applied. This testing will aid in determining the proper surface preparation, if any, that will be necessary prior to tape sealant application.

CONDITIONS OF SALE AND LIMITATIONS OF WARRANTIES:

All Schnee-Morehead products and materials are sold subject to the terms and conditions set forth in the technical data sheet, invoice, order acknowledgement and/or bill of lading. All statements, technical information and recommendations regarding such products are based on tests and examinations believed to be reliable, but Schnee-Morehead, Inc. neither guarantees nor warrants their accuracy or completeness.

It shall be the sole responsibility of the user to determine the suitability of the Schnee-Morehead product or material for each intended use and the user shall assume all risks and liability in connection with the use, or inability to use, the product or material.

To the exclusion of all other remedies, Schnee-Morehead, Inc. warrants and agrees to replace, or as its sole option, to refund the purchase price of that portion of any material or product supplied by Schnee-Morehead, Inc. which is proven, upon inspection within thirty (30) days of the date of receipt of such product or material, to be defective in material or workmanship. No salesperson, agent, employee or representative of Schnee-Morehead, Inc. has any authority to enlarge or change the terms of the warranty.

In no event shall Schnee-Morehead, Inc. be responsible for any special, indirect, consequential or incidental damages or loss, including, without limitations, loss of profits or revenues, economic losses or loss of use, whether statutory or based on theories of contract or tort. THERE ARE NO OTHER AGREEMENTS, UNDERSTANDINGS, REPRESENTATIONS OR WARRANTIES, EXPRESS OR IMPLIED (INCLUDING ANY REGARDING MERCHANTABILITY OR FITNESS FOR A PARTICULAR PURPOSE) NOT SPECIFIED HEREIN.

Complete technical information is available from Schnee-Morehead.
For technical assistance, customer service, and general information, please call 1-800-TRUST SM.

SCHNEE-MOREHEAD, INC.
111 North Nursery Road, Irving, Texas 75060
(972) 438-9111 Fax (972) 554-3939
www.trustsm.com

6/01